The Rural Utilities Service Telecommunications Program

Farm Bill Rural Broadband Access Loan Application Guide

****BEFORE GETTING STARTED****

A. Connect your resources. Documents are available on the Telecom website at http://www.rd.usda.gov/programs-services/farm-bill-broadband-loans-loan-guarantees.

1. Read 7 CFR Part 1738, the latest *Notice of Solicitation of Applications* published in the *Federal Register*, and this *Application Guide*.
2. Review with your attorney the terms and conditions set forth in the standard Broadband Loan documents.
3. Review the RUS Bulletin 1738-2, Advance and Construction Procedures Guide.
4. Contact your area's General Field Representative (GFR) on the USDA website at http://www.rd.usda.gov/contact-us/telecom-gfr.

B. Apply online.

1. Review the RD Apply Customer User's Guide.
2. Fill out the required sections of RD Apply.
3. Review your application for completeness with your GFR.

C. Wait for RUS to tell you whether or not your application is successful.

1. Receive a letter regarding your application.
2. Follow the instructions enclosed in the letter.

According to the Paperwork Reduction Act of 1995, an agency may not conduct or sponsor, and a person is not required to respond to, a collection of information unless it displays a valid OMB control number. The valid OMB control number for this information collection is 0572-0130. The time required to complete this information collection is estimated to average 118 hours per response, including the time for reviewing instructions, searching existing data sources, gathering and maintaining the data needed, and completing and reviewing the collection of information

USDA is an equal opportunity provider and employer.

The U.S. Department of Agriculture (USDA) prohibits discrimination in all its programs and activities on the basis of race, color, national origin, age, dis ability, and where applicable, sex, marital status, familial status, parental status, religion, sexual orientation, genetic information, political beliefs, reprisal, or because all or a part of an individual's income is derived from any public assistance program. (Not all prohibited bases apply to all programs.)

Persons with disabilities who require alternative means for communication of program information (braille, large print, audiotape, etc.) should contact USDA's TARGET Center at (202) 720-2600 (voice and TDD).To file a complaint of discrimination, write to USDA, Director, Office of Civil Rights, 1400 Independence Avenue, S.W., Washington, D.C. 20250-9410 or call (800) 795-3272 (voice) or (202) 692-0097.

Table of Contents

Table of Contents **3**

Section I - General Information **6**

A. About the Farm Bill Rural Access Broadband Loan Application Guide 6
B. Definitions 6
C. Program Summary 7
D. Eligible Loan Purposes 8
E. Ineligible Loan Purposes 8
F. Applicant Eligibility Requirements 9
G. Eligible Service Areas 10
H. Substantially Underserved Trust Areas 11
I. Types of Broadband Loans 11
J. Loan Terms, Security, and Amounts 12
K. Equity Requirement 13
L. Network Access Revenues 14
M. Priority Consideration 14
N. Public Notice 14
O. Contact Information 14

Section II – Application Submission and Processing **16**

A. Application Resources 16
B. Application Submission 16
C. Application Review and Notification 16
D. Loan Approval and Notification 17
E. Post-Loan Approval 17

Section III – Overview of the Online Application **18**

A. Summary 18
B. Interview Tab 19
C. Customer Tab 23
D. Loan Request Tab 23
E. Service Area(s) Tab 24
F. Construction Tab 25
1. Buildout Timeline Subtab 25
2. Capital Investment Workbook Subtab 26
3. Capital Investment Workbook Summary Subtab 28
4. Depreciation Schedule Subtab 28
5. Depreciation Prior Loans Subtab (if applicable) 29
6. Depreciation Non-Loans Subtab (if applicable) 29
G. Acquisitions Tab (if applicable) 29

H. Financials Tab 30
1. Subscriber Projections Subtab 31
2. Non-Operating Revenue Subtab 32
3. Balance Sheet Subtab 32
4. Income Statement Subtab 35
5. Statement of Cash Flows 37
6. Debt and Equity Funding Subtab 39
I. Competition Tab 40
J. Environmental Tab 40
K. Documents Tab 43
1. Attachments Subtab 43
2. Certifications Subtab 56
3. Licenses and Agreements Subtab 56
L. Summary/Submit Tab 59

Section IV-- Common Errors 61
A. Adjusted Financial Forecast Depicting 50 Percent Reduction in Revenues ("Revenue Sensitivity Analysis") with Assumptions ("Assumptions to Sensitivity Analysis") 61
B. Ways to Satisfy the Additional Cash Requirement 61
C. Investor Proposal with Bank/Financial Statements or a State/Government Bond with a Legal Opinion 62
D. Current Market Survey 62
E. Financial Assumptions 62
F. Three Years of Audited Historical Financial Data OR Three Years of Unaudited Financial Data with Tax Returns 62
G. Supporting Documentation of Existing Debt 63
H. Funded and Unfunded Service Areas. 63

Section V – Frequently Asked Questions 64
A. What is Broadband Service? 64
B. What are the terms of these loans? 64
C. Does Broadband Program provide loan funds for acquisitions? 64
D. What is the interest rate on these loans? 64
E. Do we have to use all of the loan funds? 64
F. Does the Broadband Program offer lines of credit? 64
G. Does RUS wire 100 percent of the loan amount to the Borrower at loan closing? 64
H. Under what circumstances would I need to satisfy the additional cash requirement? 64

Appendix A - Templates and Samples 66
A. Sample Legal Opinion 66
B. Sample Organizational Chart—Applicant Operations 68

C. Sample Organizational Chart—Parent/Subsidiary Operations....69
D. Equity – Investor Proposal....70
E. Equity – State/Local Government Bond....70
F. Network Diagram Examples....71

Section I - General Information

A. About the Farm Bill Rural Access Broadband Loan Application Guide

1. Purpose

This guide outlines the application process by which eligible companies can prepare and submit funding requests to the Rural Utilities Service (RUS) Telecommunications Farm Bill Rural Access Broadband Loan Program (Broadband Program). This guide will cover the following topics:

- Program regulations.
- Application process.
- Online application screens.
- Required documents.
- Common application flaws.
- Frequently asked questions.

We encourage all parties involved in the preparation of a loan application to consult this guide.

2. Policy

The policy of RUS Telecommunications is to ensure that:

- All eligible applicants submit applications that are complete and of adequate quality through RD Apply, the Agency's online application portal.
- RUS field staff review the applications for completeness prior to submission to National Office.

B. Definitions

Broadband Service
The minimum bandwidth, or transmission capacity, that is currently providing telecommunications service to subscribers in a selected area. In other words, if the existing transmission rates in an area are slower than the minimum transmission rates designated by RUS, then that area will be determined as having no Broadband Service. Broadband itself is any technology that the Administrator of RUS identifies as having the capacity to transmit data at a rate that enables subscribers to receive the minimum level of service.

- Where do I find the minimum bandwidth, or transmission rates, that qualify as providing Broadband Service?
  The minimum level of service will be stated in the most recent Notice published in the *Federal Register*. This Notice will identify the minimum downstream and upstream transmission rates for both fixed and mobile wireless service. **Please note that that the rates for fixed and mobile broadband service may differ.**

- If the Agency is reviewing my application when a new Notice changing the definition of Broadband Service is published, do I have to revise my application?
  No. If a new minimum transmission capacity for broadband service is published in the *Federal Register* while an application is pending, RUS will continue reviewing the submitted application based on the requirements that were published in the Notice that prevailed when the application was first received.

Broadband Lending Speed
As published in the latest notice in the Federal Register, the Broadband Lending Speed is the minimum bandwidth, or transmission capacity, that an applicant must propose to deliver to every customer in the proposed funded service area in order for RUS to approve a Broadband Loan. This rate may be different for fixed and mobile broadband service. As noted above, the Broadband Lending Speed may differ with the minimum transmission capacity required to determine the availability of broadband service when qualifying a service area.

- If the Agency is reviewing my application when a new Notice changing the definition of the Broadband Lending Speed is published, do I have to revise my application?
  No. If a new Broadband Lending Speed is published in the *Federal Register* while an application is pending, RUS will continue reviewing the submitted application based on the requirements that were published in the Notice that prevailed when the application was first received.

Customer Premises Equipment (CPE)
In the context of network services, CPE means any network-related equipment used by a customer to connect to a service provider's network.

Notice
The Agency will publish a Notice of Solicitation of Application (NOSA) or Notice of Funding Availability (NOFA) in the *Federal Register*, depending on funding, which will announce the application window and update any program information.

Proposed Funded Service Area (PFSA)
A PFSA outlines a geographic area in which an applicant proposes to offer service at the Broadband Lending Speed using Broadband Loan funds.

Service Area
A service area is a geographic area in which a service provider offers general telecommunications service.

General Field Representative (GFR)
Field staff tasked with assisting borrowers develop and submit loan applications and supporting materials. Contact information may be found at https://www.rd.usda.gov/contact-us/telecom-gfr.

Environmental Report (ER)
The environmental documentation that is required of applicants for proposed actions under 7 CFR 1970.

C. Program Summary

1. Background

Our partnership with rural America is long-standing. For over 60 years, the Telecommunications Program has been at the forefront of providing the infrastructure financing that has brought advanced telecommunications services to the most rural areas of our country. Today, Rural Development's Telecommunications Program continues to be an essential source of financing and technical assistance for rural telecommunications systems.

2. Mission

The goal of the Broadband Program is to ensure that rural consumers enjoy the same quality and range of services that are available in urban and suburban communities. Successful entities propose to offer service at a level that keeps pace with technological innovations while meeting the demands of customers in rural America.

D. Eligible Loan Purposes

Under the Broadband Program, RUS will finance or fund the following:

1. **Construction, improvement, and acquisition of all facilities** required to provide service at the Broadband Lending Speed in eligible rural areas, including facilities required for providing other services over the same facilities.

2. **Cost of leasing facilities** that are required to provide service at the Broadband Lending Speed if the lease qualifies as a capital lease under Generally Acceptable Accounting Procedures (GAAP). The financing of such a lease will be limited to the first three years of the loan amortization period.

3. **Acquisition of facilities, portions of an existing system, and/or another company** by an eligible entity, where acquisition is used in the applicant's business plan for furnishing or improving service at the Broadband Lending Speed. If a service area is to be acquired, please note the following:

   3.1 The service area must meet the requirements for RUS funding.
   3.2 The acquisition costs requested to be funded by RUS cannot exceed 50 percent of the requested loan amount.
   3.3 The purchase must provide the applicant with a controlling majority interest in the equity acquired.

4. **Refinancing of an outstanding obligation on another telecommunications loan** made under the Rural Electrification Act of 1936, as long as refinancing the loan supports the construction, improvement, or acquisition of facilities and equipment for the provision of service at the Broadband Lending Speed in rural areas. The following conditions apply to requests that include refinancing:

   4.1 No more than 40 percent of the Broadband Loan amount can be used to refinance the outstanding telecommunications loan.
   4.2 The applicant must be current with payments on the loan(s) to be refinanced.
   4.3 The amortization period for the refinancing portion of the Broadband Loan cannot exceed the remaining amortization period for the telecommunications loan(s) to be refinanced. If multiple notes are being refinanced, an average remaining amortization period will be calculated based on the weighted dollar average of the notes being refinanced.

5. **Pre-loan expenses,** e.g., any expenses associated with the preparation of a loan application, such as obtaining market surveys, accountant/consultant costs for preparing the application and supporting information. The following conditions apply to requests that include pre-loan expenses:

   5.1 Funded pre-loan expenses cannot exceed 5 percent of the Broadband Loan excluding any amount requested to refinance outstanding telecommunication loans.
   5.2 Pre-loan expenses may be reimbursed only if they are incurred prior to the date on which notification of a complete application is issued.

E. Ineligible Loan Purposes

Under the Broadband Program, RUS will NOT finance or fund the following:

1. Applicant operating expenses.

2. Construction and other project-related costs incurred prior to the date on which notification of a complete application is issued (with the exception of eligible pre-loan expenses).

3. Acquisition of any stock of an affiliate of the applicant.

4. Purchase or acquisition of any facilities or equipment of an affiliate, unless approved by RUS in writing (such a purchase or acquisition may be approved if the applicant demonstrates that the purchase or acquisition will involve an arms-length transaction, as defined in 7 CFR 1738.2, and that the cost is advantageous for the applicant).

5. Purchase of Customer Premises Equipment (CPE) and the installation of associated inside wiring unless the CPE is:

   5.1 Owned by the applicant throughout its economic life.

   5.2 Backed by acceptable collateral that is not currently owned by the applicant and that has a value at least equal to the purchase price of the CPE (such collateral may not be purchased with RUS loan funds).

   5.3 Paid for through a revolving fund whereby the proceeds from CPE sold to the customer (at least the applicant's cost of the equipment) is returned to the fund and used to purchase additional CPE.

6. Purchase or lease of any vehicles not used primarily in construction or system improvements.

7. Cost of systems or facilities that have not been designed and constructed in accordance with the loan contract and other applicable requirements.

8. Facilities leased under the terms of an operating lease.

9. Merger or consolidation of entities.

F. Applicant Eligibility Requirements

1. Entity eligibility. To be eligible for a Broadband Loan, an applicant may be either a nonprofit or for-profit organization with sufficient authority to enter into a contract with RUS. The organization must take one of the following forms:

   1.1 Corporation.

   1.2 Limited Liability Company (LLC).

   1.3 Cooperative or mutual organization.

   1.4 Indian tribe or tribal organization, as defined in 25 U.S.C. 450b.

   1.5 State or local unit of government, including any agency, subdivision, or instrumentality thereof.

2. Additional conditions for eligibility. The applicant must do the following:

   2.1 Submit a complete loan application that meets the requirements set forth in 7 CFR 1738 as well as any additional requirements published in the *Federal Register*.

   2.2 Agree to complete the build-out of the broadband system described in the loan application within 3 years from the day the applicant is notified that loan funds are available. Under the terms of the loan documents, this 3-year period will commence 120 days after the date of the loan contract. The loan application must demonstrate that all proposed construction can be completed within the 3-year period with the exception of CPE. CPE can be funded throughout the forecast period. **Ensure that the Buildout Timeline and Depreciation Subtabs reflect this requirement.**

   2.3 Demonstrate an ability to furnish, improve, or extend broadband facilities to provide service at the Broadband Lending Speed in the proposed funded service area (PFSA).

2.4 Demonstrate an equity position equal to at least 10 percent of the amount of the loan requested in the application (refer to 7 CFR 1738.207)

2.5 Provide additional security if it is necessary to ensure financial feasibility as determined by the Administrator. If the Agency's financial analysis indicates that the applicant's entire operation (existing operations and new operations combined) will show an inadequate cash balance at the end of any year during the 5-year forecast period, the Agency will require the applicant to obtain additional cash infusions necessary to maintain an appropriate cash balance throughout the 5-year forecast period. This cash infusion would be in conjunction with the required 10 percent minimum equity position (refer to 7 CFR 1738.208).

3. Ineligible applicants. The following entities are not eligible for Broadband Program financial assistance:

3.1 Individuals and partnerships.

3.2 Corporations that have been convicted of a Federal felony within the past 24 months. Any corporation that has been assessed to have any unpaid federal tax liability, for which all judicial and administrative remedies have been exhausted or have lapsed and is not being paid in a timely manner pursuant to an agreement with the authority responsible for collecting the tax liability, is not eligible for financial assistance.

Note: Current RUS borrowers that are in violation of their existing loan agreements are ineligible.

G. Eligible Service Areas

1. General Eligibility. Applicants must identify at least one section, called the PFSA, in which they propose to use RUS funding to offer service to all premises at the Broadband Lending Speed. In order for the Service Area to be eligible for the Broadband Program, the following criteria must be true:

1.1 The PFSA is completely contained within a Rural Area. Only PFSAs completely contained within a single rural area or composed of multiple rural areas are eligible for a Broadband Loan. Under this program, a rural area is any area, as confirmed by the latest decennial census of the Bureau of the Census, which is not located within:

1.1.1 A city, town, or incorporated area that has a population of greater than 20,000 inhabitants.

1.1.2 An urbanized area[1] contiguous and adjacent to a city or town that has a population of greater than 50,000 inhabitants.

1.2 At least 15 percent of the households in the PFSA do not have access to Broadband Service

1.3 No part of the PFSA has three or more incumbent service providers.

1.4 No part of the PFSA overlaps the service area of current RUS Telecommunications Program borrowers, nor the service areas of grantees that were funded by the RUS Telecommunications Program.

2. Exceptions. There are three service area exceptions for broadband facility upgrades:

2.1 If a current broadband borrower applies to upgrade existing facilities in an existing service area, the upgraded area is exempt from the 15 percent requirement regarding the number of unserved households.

[1] An urbanized area is a densely populated territory as defined in the latest decennial census of the U.S. Census Bureau.

2.2 Incumbent service providers, including borrowers and grantees, that apply to upgrade existing broadband facilities in existing service areas are exempt from the requirement concerning the number of incumbent service providers unless they are eligible for funding under Titles II and III of the RE Act.

2.3 An applicant that is a borrower, grantee, or incumbent service provider may submit **one** application to upgrade existing broadband facilities in existing service areas and expand into new service areas at the Broadband Lending Speed, provided that the upgrade area and the expansion area are proposed as two separate service areas, even if the upgrade and expansion areas are contiguous.

3. RUS Considerations. As stated above, an entity applying to the Broadband Program must plan to use RUS funding to provide service at the Broadband Lending Speed in at least one eligible service area. An applicant may also offer service to ineligible areas in order to achieve overall project financial feasibility; however, the applicant may only use non-RUS funding for those areas.

   Multiple service areas may be included in a single application. However, non-contiguous areas MUST be treated as separate service areas for the purpose of determining service area eligibility. If non-contiguous area(s) within the application are deemed ineligible, RUS may consider the remaining areas listed in the application. If the applicant fails to remove, modify, or provide additional information regarding ineligible areas as requested by RUS, the application will be returned.

   Please note that after RUS receives the application, the Agency collects further information determining a service area's eligibility a Public Notice process. Therefore, applicants must thoroughly research the area(s) in which they propose to provide service and carefully account for each of the area's eligibility criteria to the extent possible.

H. Substantially Underserved Trust Areas

If the Administrator determines that a community in ''trust land'' (as defined in section 3765 of title 38, United States Code) has a high need for the benefits of the Broadband Program, he/she may designate the community as a "substantially underserved trust area" (SUTA), as defined in section 306F of the RE Act.

To receive SUTA consideration, the applicant must attach all of the information requested in 7 CFR 1700, Subpart D to the application and do both of the following:

1. Notify the Agency in writing that it seeks consideration as a substantially underserved trust area.

2. Identify the discretionary authorities of 7 CFR 1700, Subpart D that apply to the request.

I. Types of Broadband Loans

The Broadband Program provides three types of financial assistance: Cost of Money Loans, 4-percent, and Guaranteed Loans. Applicants may request a combination of the direct loans, subject to eligibility and availability of funds. Note: In recent years appropriations have been limited to Direct Cost-of-Money Loans. Check with your GFR for funding types available.

1. Direct Cost-of-Money

   Direct Cost-of-Money loans will bear interest at a rate equal to the cost of borrowing from the Department of Treasury for obligations of comparable maturity. The applicable interest rate will be set at the time of each advance. Department of Treasury interest rates are released daily and can be found in Release H.15 at http://www.federalreserve.gov/releases/h15/update/. The applicable interest rate is found below the heading "U.S. government securities" under the sub-heading "Treasury constant maturities."

2. Direct 4-Percent

Direct 4-Percent loans shall bear interest at 4 percent on each advance made to the borrower. Such loans may be used by RUS, at its discretion, to assist applicants in meeting financial feasibility requirements for applications serving unserved areas. Additional eligibility requirements for Direct 4-Percent Loans may be published in the *Federal Register*. Direct 4-Percent Loans may be made simultaneously with a Direct Cost-of-Money Loan.

3. Other Loan Guarantee

Other Guarantees are third party loans and are therefore not funded by RUS. This loan shall bear interest at a rate set by the lender consistent with the current applicable market rate for a loan of comparable maturity. RUS will guarantee up to 80 percent of the principal amount of the loan, excluding any and all charges and fees.

J. Loan Terms, Security, and Amounts

1. Repayment Terms

The Broadband Loan term will be equal to or less than the expected composite economic life of the assets to be financed by the loan, plus three (3) years. This term is rounded to the nearest whole year. The expected composite economic life of the assets will be based upon acceptable depreciation rates. Applicants may request a repayment period that is shorter; such requests will be granted only if RUS determines that the loan would remain feasible.

2. Special Loan Terms and Conditions

If the applicant is proposing to serve an area(s) that includes at least 50 percent unserved households, RUS may consider special terms and conditions. See 7 CFR 1738.155 for details. To receive consideration, the applicant must submit as an additional attachment a request for any of the following:

2.1 A principal deferral period up to 4 years.

2.2 An extension of the loan term up to 35 years.

2.3 A modification to the security requirements, as long as the modifications are necessary to sustain the operation and do not prejudice the government's security for the loan. The modification must ensure that the proposed security arrangements are commensurate with the risk of the project.

3. Broadband Loan Security

3.1 The Broadband Loan must be secured by the assets purchased with the loan funds, as well as all other assets of the applicant and any other signer of the loan documents except as provided in 7 CFR 1738.155.

3.2 The Agency must be given an exclusive first lien, in form and substance satisfactory to the Agency, on all of the applicant's property and revenues and such additional security as the Agency may require. The Agency may share its first lien position with another lender on a *pari passu*, prorated basis if security arrangements are acceptable to the Agency.

3.3 Unless otherwise designated by the Agency, all property purchased with loan funds must be owned by the applicant.

4. Minimum and Maximum Loan Amounts

These amounts will be published in the *Federal Register*.

Please note that an applicant that provides telecommunications or broadband service to at least 20 percent of the households in the United States is limited to a loan amount that is no more than 15 percent of the funds available to the Broadband Program for the Federal fiscal year.

K. Equity Requirement

As a condition to financing, an applicant must demonstrate an equity contribution in an amount that is at least 10 percent of the requested loan amount at the time of application submission. The equity contribution must remain available at loan closing.

1. What determines the Equity Requirement?

RUS reviews the applicant's Balance Sheet from the most recent fiscal year end (except for start-ups in accordance with 1738.211) to determine if the organization's current equity is equal to 10 percent of the requested loan amount. As defined in 7 CFR 1738, equity means total assets minus total liabilities. In addition to the 10 percent minimum equity requirement, RUS may require additional cash in support of the loan.

2. What additional documentation must applicants attach to their applications if they do not demonstrate the minimum 10 percent equity?

2.1 **Investor's Unconditional Legal Commitment with the Investor's Bank or Financial Statements.**

2.1.1 Applicants other than state or local government entities must submit an investor's unconditional legal commitment that covers the shortfall by providing additional equity. This additional equity must be transferred to the applicant prior to loan closing. RUS will reject applications that do not provide evidence acceptable to RUS regarding the investor's commitment.

2.1.2 Requirements: The document must clearly identify the amount, terms, conditions of the investment, and the investor's bank or financial statements that demonstrate its ability to fulfill its commitment. The terms and conditions of the investment must also be acceptable to RUS, but at a minimum cannot be secured by any assets of the applicant nor provide that the investment will be available when certain requirements or other thresholds are met by the applicant.

2.2 **General Obligation Bond and Opinion from Legal Counsel**

2.2.1 Applicants that are state or local government entities must submit two documents, the general obligation bond that will be available to the applicant at closing and an opinion from legal counsel. The Broadband Loan cannot be subordinate to the general obligation bond. Also, revenue bonds supported by the operations to be funded cannot be used to satisfy the equity requirement.

2.2.2 Requirements: The opinion from its legal counsel must state that the applicant has the authority to issue a general obligation bond in an amount sufficient to meet the minimum equity requirement.

L. Network Access Revenues

Applicants which receive or expect to receive Network Access Revenues (Line 2 of the RD Apply Income Statement), must include supporting analysis and explanation from a cost consultant or other qualified individual(s) to support the projections.

M. Priority Consideration

Priority must be given to applicants that propose to offer broadband service to the greatest proportion of households that, prior to the provision of the broadband service, had no incumbent service provider. The Broadband Program deems households unserved if they do not have access at the level of service specified in the program's definition of broadband service, as published in the *Federal Register*.

Please note that for applications containing multiple PFSAs, the percentage will be calculated by combining all of them. Once an application has been determined to be complete, it will be compared and prioritized according to the criteria listed below:

- 100 percent of the households in the PFSA are unserved.
- 75 percent of the households in the PFSA are unserved.
- 50 percent of the households in the PFSA are unserved.
- 25 percent of the households in the PFSA are unserved.

For the eligible applications whose PFSAs do not meet the above thresholds but whose customer base is at least 25 percent commercial, RUS will process the applications that propose to serve more households first.

N. Public Notice

The Public Notice filing is a critical part in determining service area eligibility, especially in terms of counting the number of incumbent service providers in a given area. The information supplied in the Service Area(s) Tab provides the necessary detail for the 30-day public notice. RUS will post this public notice, which announces an applicant's intention to offer service at the Broadband Lending Speed, on the Telecom website. Please refer to 1738.204 for details of the Public Notice Process.

O. Contact Information

RUS Telecommunications General Field Representatives (GFRs) are available to answer questions about the application process and program requirements. A listing of the GFRs and Deputy Assistant Administrators can be found on the website at http://www.rd.usda.gov/contact-us/telecom-gfr.

RUS also posts the latest developments in the Broadband Program, including an electronic copy of this Guide, on the Telecom website at http://www.rd.usda.gov/programs-services/farm-bill-broadband-loans-loan-guarantees.

****NOTES ON SECTION I****

RUS does not make loans to individuals or partnerships.

At least 15 percent of the households within each PFSA must be unserved in order to be eligible for Broadband Program funding.

Service Area eligibility is determined by rurality, percent unserved, number of incumbent providers, and the public notice responses. However, there are exceptions to those rules.

Start-up companies and companies that show negative cash flow from operations in the last two years must submit additional documents.

The minimum Equity Requirement means that the applicant's total equity must be equal to at least 10 percent of the requested loan amount. Applicants that do not have enough equity must submit additional documents.

Successful applicants may use up to 5 percent of the loan amount to cover approved pre-loan expenses.

Section II – Application Submission and Processing

A. Application Resources

1. Telecom General Field Representative (GFR). We strongly recommend that all prospective Broadband Loan applicants consult with the RUS Telecom GFR prior to submitting an application. The GFR will serve as a guide throughout the loan application process. RUS Staff contact information can be accessed on the website: http://www.rd.usda.gov/contact-us/telecom-gfr.

2. Consultants. The applicant may request to allocate a portion of the proposed loan funds to finance the costs of hiring a consulting engineer. Consulting services should be obtained only from persons or firms who are not affiliated with, and have not represented a contractor, vendor, or manufacturer who may provide labor, materials, or equipment to the applicant for projects included in the loan application.

B. Application Submission

1. RUS acceptance of applications

   RUS will publish a notice in the *Federal Register* with instructions for submitting applications. Applicants must submit their applications through RD Apply, the Agency's online application intake system. In addition to completing the main application screens, each applicant is responsible for attaching additional documents, certifications, and licenses and agreements as described in 7 CFR 1738, the Notice published in the *Federal Register*, and this *Application Guide*.

2. Pre-submission review of application

   It is recommended that your GFR perform a final review of your application before submission.

C. Application Review and Notification

Once an application has been received, it will be reviewed for eligibility and completeness.

1. Eligibility and Completeness Review

   The completeness review will include an assessment of whether all required documents and information have been submitted, and whether the information provided is of adequate quality to allow for further analysis.

   1.1 **Application is eligible, complete, and of adequate quality**. If the application is complete and of adequate quality then the Public Notice process discussed in the regulation will be followed. If the PFSA(s) is eligible, program staff will notify the applicant in writing that the application is complete. A notification of completeness is not a commitment that the loan will be approved. RUS may still request additional information to complete the financial and technical feasibility evaluations.

   1.2 **Application is ineligible, incomplete, and/or of inadequate quality.** Program staff will notify the applicant in writing that the application has been rejected. The rejection letter will include an explanation of the reasons for rejection.

2. Engineering and Feasibility Studies Evaluation

   After an applicant is notified that the application is complete, RUS will evaluate the application's financial and technical feasibility, as well as its compliance with statutory and regulatory requirements, as follows:

   2.1 **Financial feasibility.** Financial feasibility will be determined by evaluating the applicant's equity,

market survey (if required), competitive analysis, financial information, and other relevant information in the application.

2.2 **Engineering review.** Technical feasibility will be determined by evaluating the impact of the facilities financed with the proceeds of the loan and the associated debt, the applicant's network design in conjunction with other relevant information in the application.

D. Loan Approval and Notification

If the application meets all statutory and regulatory requirements, the feasibility study demonstrates that the TIER requirement can be satisfied, and the business plan is sustainable, the application will be submitted to RUS' credit committees for consideration. Submission of an application to the credit committees does not guarantee that a loan will be approved. The applicant will be notified of RUS' decision in writing as follows:

1. Approval. RUS will specify a date by which the applicant must officially accept and respond to the offer.

2. Rejection. RUS will send a rejection letter to the applicant and return the application with an explanation of the reasons for the rejection.

E. Post-Loan Approval

After a loan is approved, RUS will prepare and send the Loan Documents to the awardee along with instructions for execution, recording, and submittal. The borrower's attorney should follow the enclosed instructions and double-check the assembled items to ensure that all items are complete prior to returning the package to RUS.

****NOTES ON SECTION II****

If a loan application is returned by RUS, the deficiencies may be corrected and the application may be resubmitted at a later date in accordance with the procedures outlined in the next *Federal Register* notice, the regulation, and this guide.

Applicants should consult with their assigned General Field Representative. Contact information may be found at https://www.rd.usda.gov/contact-us/telecom-gfr.

Section III – Overview of the Online Application

A. Summary

As of April 8, 2016, all Farm Bill applicants were required to submit their Broadband Applications through RD Apply, which is Rural Development's secure online application portal. RD Apply simplifies common application tasks, from pre-populating corresponding fields across the application to extending simultaneous electronic access to each member of the applicant team.

1. How is the electronic application different from the expired 2015 hardcopy application?

Prior to RD Apply, the loan application consisted of several schedules, A through S. The electronic application reorganized this information by combining related content on ten to eleven distinct tabs. Some tabs include subcategories, or subtabs, that allow the applicant to provide specialized information. The number of categories included in the application is determined by a short questionnaire that the system generates as soon as the applicant creates a new application. This questionnaire, which can be revisited, drives the layout of the application and identifies the kinds of documents that the applicant is required to upload.

Please refer to the table below for a cross reference of RD Apply and the prior paper application.

Table 1 Application Comparison	
2017 Online Application – Electronic Tabs	**2015 Paper Application – Physical Forms**
1. Interview	RUS Form 532
2. Customer	RUS Form 532 Schedule A Congressional Districts
3. Loan Request	RUS Form 532
4. Service Area(s)	Schedule F Maps and Demographic Data Schedule G New/Existing, Funded/Non-Funded
5. Construction	
Buildout Timeline Capital Investments Workbook (CIW) CIW Summary Depreciation Schedule Depreciation Prior Loans* Depreciation Non Loans*	Schedule P Project Costs and Buildout Timeline Schedule M-6 Depreciation Schedule
6. Acquisitions*	
7. Financials	
Subscriber Projections Non-Operating Revenue Balance Sheet Income Statement Cash Flows Debt & Equity Funding	Schedule M-3 Subscriber Projections/Service Tiers Schedule M-4a Pro-Forma 5-Year Forecast Schedule M-2 Debt and Equity Funding
8. Competition	Schedule L Competitive Analysis
9. Environmental	Schedule Q Environmental Report
10. Documents	
Attachments Certifications Licenses & Agreements	Schedule B Executive Summary Schedule C Legal Opinion and Property Schedule Schedule D Corporate Structure Schedule E Board Resolution

	Schedule H Compliance Certificates Schedule I Outstanding Federal Debt Schedule J Equity Schedule K Research Data and Market Analysis Schedule N Network Design Schedule O Network Diagrams Schedule R Licenses and Agreements
11. Summary/Submit	

* These tabs and subtabs may or may not appear, depending on the applicant's responses in the Interview.

While the system automatically checks for consistency across certain fields of data, typically in related numerical data across tabs, it is the applicant's responsibility to ensure that all data throughout the main application and the attached documents are accurate and consistent. Conflicting data will impede RUS' analysis and will detract from the quality of the overall application.

2. How can I best use this Guide?

This Guide is organized according to the Tabs and Subtabs that make up an electronic Broadband Loan application. As we move through the screens, we address the user of this guide as if that user is the one requesting RUS funding. If a consultant is the one completing the application, please note that most **personal pronouns refer to the entity** that will undertake the proposed project if selected. In instances in which we want to distinguish more generally among applicants, we will use the third person.

3. Where can I find information on how to access RD Apply?

For information on the security steps and the technical aspects of RD Apply, please consult the Telecom Customer User's Guide, which can be found on the Telecom website at: http://www.rd.usda.gov/programs-services/farm-bill-broadband-loans-loan-guarantees.

B. Interview Tab

1. Creating your application. Select "Add New Application" on the RD Apply home screen. A series of questions will pop up in your browser. Each question is linked to another part of the application, so take your time as you complete the questionnaire. These questions determine the content listed on the following screens and identify the documents that you will be required to upload. Refer to Table 2 for the list of questions and their impacts.

2. Changing your responses. If you need to change your answer, go to the "Interview" tab in the main application and modify the response. Each response impacts another section of the application. For example, if you remove "Acquisitions" from your response to the question regarding the nature of network changes, then the Acquisitions Tab and any data that you had entered on that screen will disappear from the application.

3. Exiting in the middle of the questionnaire. If you are interrupted in the midst of the questionnaire, save your progress when you exit. Because an application is created only after a complete questionnaire is submitted, you must click on "Add New Application" to resume your half-finished questionnaire.

4. Submitting the questionnaire. When you have reached the end of the questionnaire, click "Submit." Once the dialog box closes, the system will direct you to a fully assembled application, starting with the Customer Tab. Please note that you have the ability to change your answers to the interview questions at any point in time prior to application submission. Keep in mind that any changes made to the answers to your interview questions will have a direct impact on other sections of your loan application.

Table 2 Application Questionnaire		
Question	**Guidance**	**System-Generated Required Documents**
1. Which Rural Utilities Service (RUS), Rural Development (RD) Program Area are you requesting funds from?	Telecommunications	**Added to the Attachments Subtab** Proposed Network Diagram System Design Assumptions Used to Support Financial Forecast Design Certification(s) Executive Summary Legal Opinion Real Property Schedule Organizational Chart **Added to the Certifications (Cert) Subtab** Cert Regarding Debarment, Suspension, and Other Responsibility Matters Cert Regarding Lobbying for Contracts, Grants, Loans and Coop Agreements Civil Rights Compliance Uniform Relocation Assistance & Real Property Acquisition Policies Act of 1970 Representations Regarding Felony Conviction and Tax Delinquent Status for Corporate Applicants (Form AD-3030) **Added to the Licenses and Agreements Subtab** Certificate of Public Convenience and Necessity (CPCN) Franchise Agreements Internet Service Agreement (for ISP Upstream capacity) Internet Service Connection Backhaul (transport to/from ISP) Pole Attachment Agreement Special Permits (Federal, highway, bridge) Spectrum Agreement(s) Tower Attachment Agreement Tower Site/Property Agreement Video Carriage Agreement Wireless Spectrum License for backhaul or transport Wireless Spectrum License for end user access Affiliate Agreement
2. Please validate the Legal Name is correct for the application you are creating.	Enter the legal name of the applicant	--
3. Is this your entity's first application with RUS, RD?	Yes/No	**IF YES (Added to the Attachments Subtab):** Articles of Incorporation or Organization Board of Directors or Managing Members Bylaws or Operating Agreements

4. (Dependent on 3) Do you have a previous RUS loan for which you will be completing construction during the 5-year forecast period?	Yes/No	**IF YES (added in the Main Application):** Depreciation Prior Loan Subtab
5. What type of funding opportunity are you applying for?	Farm Bill Broadband Loan	**Added to the Attachments Subtab** Competitor Strategic Plan Management Experience and Compensation Applicant Historical Financials (if not a start-up company)*If unaudited, you must include a list of Assumptions in support of historical financial data included within the Financial subtabs. **Added to the Certifications Subtab** Cert Regarding Architectural Barriers Cert Regarding Flood Hazard Area Precautions
6. What type of Farm Bill funds are you applying for?	Cost of Money, 4%, and/or Other Guarantee	--
7. Are you using non-loan funds during the forecast period?	Yes/No	**IF YES (added in the Main Application):** Depreciation Non Loan Subtab added Non-RUS funding source added to the Debt and Equity Subtab
8. What is the nature of network changes being made?	Upgrade, Expand, Build, Acquisition, and/or Refinance	**IF Acquisitions (added in the Main Application):** Selected network changes appear on the Loan Request Tab Acquisitions Tab added **Added to the Attachments Subtab** Acquisition Agreement
9. Are you delinquent on any of your federal debt?	Yes/No	**IF YES (Added to the Attachments Subtab):** Outstanding Federal Debt
10. Are you requesting SUTA consideration?	Yes/No	**IF YES (Added to the Attachments Subtab):** SUTA Attachments
11. Does the applicant have a parent operation?	Yes/No	**IF YES (Added to the Attachments Subtab):** Parent Company Historical Financial Statements Organizational Chart – Parent Operation
12. Does the applicant have a subsidiary operation?	Yes/No	**IF YES (Added to the Attachments Subtab):** Subsidiary Historical Financial Statements Organizational Chart – Subsidiary Operation
13. Does the applicant rely on services provided by an affiliate operation?	Yes/No	**IF YES (Added to the Attachments Subtab):** Affiliate Historical Financial Statements
14. Is your company a start-up company?	Yes/No	**IF YES (Added to the Attachments Subtab):** Balance Sheet Unaudited Financial Statements-Tax Returns Revenue Sensitivity Analysis (50% Reduction in Revenues Financial Forecast) Assumptions to Sensitivity Analysis (50% Reduction in Revenues)
15. Is your company requesting interim financing?	Yes/No	**IF YES (Added to the Attachments Subtab):** Interim Financing Request

16. Are you requesting special consideration to complete this project?	Yes/No	**IF YES (Added to the Attachments Subtab):** Special Consideration Request
17. Does your organization have more than 100 people?	Yes/No	**IF YES** GFR must confirm that the company has filed its EEO-1 report prior to loan approval.

C. Customer Tab

Purpose: To describe your organizational information and contact details

Follow the instructions to fill out each field. All items with a red asterisk (*) are required fields.

1. *Legal Name – Prefilled based on the questionnaire. This should be the name your organization used when registering with the System for Award Management (SAM). For information on registering, go to https://www.sam.gov/.
2. Primary Borrower ID – Do not populate this field. The Primary Borrower ID is assigned by USDA.
3. *Organizational Description – Enter the name of the primary department, division, or office that will undertake the assistance activity (e.g., Telecommunications).
4. Tax ID Number (TIN) – Enter your TIN in the space provided. If an existing borrower, this field is prefilled. If your TIN is prefilled, please validate the number in the box.
5. Organizational Type – Select the choice that best describes your organization's legal structure.
6. RUS ID – If your company has not submitted an RUS loan or grant application before, leave this field blank. If you have several RUS IDs, please include your Farm Bill or BIP RUS ID.
7. *Civil Rights – Check all of the boxes that apply to your business ownership.
8. *DUNS NBR – Enter the organization's Dun and Bradstreet (DUNS) number. For information on obtaining a DUNS numbers, go to http://fedgov.dnb.com/webform/.
9. Comments – Enter any information about your company currently not captured in any part of the application, but is important for RUS to know.
10. CAGE Code – The Commercial and Government Entity Code (CAGE) is your organization's SAM number.
11. *Address – Identify your mailing address and congressional district. If the mailing address differs from the street address, select "Add New +" and enter the street address as well.
12. *Key Contacts –Enter the name of the person responsible for answering questions about this application. Under "Type," select the role that best fits the contact listed. Add additional contacts as needed.
13. Aliases – Identify all of the organization's aliases (e.g. "Common name" and "Doing Business As"); otherwise, leave blank.

D. Loan Request Tab

Purpose: To provide information on the proposed project and requested loan amount.

Related Screens: Construction Tab; Capital Investments Workbook Subtab; Financials Tab; Documents Tab

Follow the instructions to fill out each field. All items with a red asterisk (*) are required fields.

1. *Project Title – Enter the name for the proposed project (e.g., [Name] Fiber Network Buildout).
2. Purpose – Describe the purpose of the funding request in one or two sentences.
3. *Technology Type – Check all of the boxes that apply to your proposed project.
4. Executive Summary – Provide a high level overview of the organization and the proposed project. All applicants must also submit a detailed Executive Summary Attachment, as described in this section of the Guide.
5. *Loan Maturity Requested in Years – Enter the loan term requested. The standard term is composite economic life plus 3 years, but you may request less or more, up to 35 years. Include a

narrative/quantitative explanation within the Executive Summary that demonstrates how you arrived at the maturity date.

6. *Loan Amount – Enter the requested loan amount for each loan type, as applicable. The available loan types correspond with the boxes selected during the questionnaire. For applicants that select Direct Loan, please note that RUS may choose to offer a cost-of-money loan or a 4 percent loan, or a combination thereof, at its discretion.
7. Total Loan Request – Automatically calculated according to the amounts entered for each loan type. Check to ensure the total request is within the minimum and maximum amounts stated in the most recent publication of the *Federal Register*.
8. *Nature of Network Changes – Indicate the proposed funding amounts for each of the proposed network changes. These items correspond with the boxes selected during the questionnaire. To make changes to this section, open the Interview Tab and modify your response to the question, "What is the Nature of the Network changes being made?" The total amount for this section must equal the total requested loan amount and the project budget total on the Capital Investment Workbook.

E. Service Area(s) Tab

Purpose: To provide maps and demographic information on the Proposed Funded Service Areas (PFSA) and Non-Funded Service Areas. These maps will be used to determine service area eligibility and provide information for the 30-day public notice.

Related Screens: Construction Tab; Subscriber Projections Subtab; Competition Tab; Environmental Tab

1. To complete this tab, begin by adding maps of each of your proposed funded and non-funded service areas. Each map must identify the rural area boundaries and the unserved areas within the service area. An unserved area indicates an area that is not offered Broadband Service as published in the *Federal Register*. Non-funded areas are areas in which you provide service or plan to build out during the forecast period, but do not intend to use RUS funding. Please review the following guidelines before submitting your maps:

    1.1 A service area is defined as the geographic area in which a service provider offers telecommunications services. You must submit a map for all existing and new service areas as they apply to your company. Therefore, an application may include one or many service areas. Please draw or upload a shape file of each service area as a separate map. To view the individual service areas or the comprehensive service area map, click "Edit/View Map" or "View All" on the Service Area(s) Tab.

    1.2 Each non-contiguous geographic area should be treated as separate service area. Remember, if you want to upgrade existing broadband facilities in existing service areas and expand into new service areas at the Broadband Lending Speed, you must draw the upgraded and expansion areas as two **separate** service areas, even if they are contiguous.

    1.3 Each and every PFSA in an application must be entirely rural. It cannot overlap with any portion of a non-rural area.

2. Follow the instructions when completing the "Add New Service Area" dialog box.

    2.1 *Program Type – Prefilled with "Telecommunications," based on the questionnaire.

    2.2 *Funding Type – Prefilled with "Farm Bill Broadband Loan," based on the questionnaire.

    2.3 *Area Name – Enter a unique name for this area.

    2.4 *Service Area will be "Funded" or Unfunded" – Identify whether you intend to use RUS

funding in this area.

2.5 Check the box if at least 15 percent of the households in this area are considered unserved.

2.6 *Check all services to be provided within the service area – In areas that will be "Funded," data service will automatically be selected. Check all other services that will apply to this area. For areas that are "Non-Funded," check all services that apply.

2.7 Comments – Enter any information about this service area that is important for RUS to know.

3. Selecting Draw/Upload will open a screen labeled "USDA RD RUS Intake" in a new tab. Wait for the map to center on the United States. In the Search bar, you can type an address or a zip code to bring up the general geographic location of your service area. You can either draw or upload a map in this section. If you want to draw your service area using this mapping tool, please note the following instructions.

   3.1 Area Type: Base. First, use the Editing/Select Tools to draw the entire geographic "Base" of this service area. This area should match the description you entered on the previous screen. This area can be either a proposed funded service area (PFSA) or it can be a non-funded service area.

   3.2 Area Type: Unserved. Second, use the Tools to draw the "Unserved" sections within the base service area. A base service area can feature more than one unserved location. Multiple unserved areas can be noncontiguous and drawn throughout the map. The program will automatically calculate the total percent unserved for this service area, based on the 2010 U.S. Census.

   3.3 Additional instructions: For step-by-step technical instructions on drawing or uploading service area maps, click on "Instructions" in the tool bar at the top of the screen.

4. Once you have saved and exited this section, you may return to your main application. The new service area will appear in the table accompanied with general demographic data derived from the 2010 U.S. Census. If any of the decennial census data is incorrect or outdated, open the Edit/View Data button. In this dialog box, provide Alternate data for those categories. If you provide Alternate data for any category, you must also provide an explanation that supports and justifies the new data. Please input your justification for inputting alternate data in the 'Explanation for changes in detail' text box. If additional explanation is required, you may upload a supporting attachment on the Attachments Subtab under the Category Type "Other – Misc. Support Docs."

F. Construction Tab

Purpose: To provide information about the construction timeline and break down project costs related to capital investments, depreciation schedules, and funding sources.

Related Screens/Subtabs: Buildout Timeline Subtab; Capital Investments Workbook and Summary Subtabs; Depreciation Schedule Subtab; Depreciation Non Loans Subtab (if applicable); Depreciation Prior Loans Subtab (if applicable); Loan Request Tab; Financials Tab; Documents Tab

1. Buildout Timeline Subtab

This subtab allows you to list chronologically the major network build-out phases and milestones that demonstrate that your entire project will have all construction complete by the end of Year 3,

except for potential customer installs in Years 4 and 5. Please provide details for each PFSA when considering your phases and milestones.

The milestones, which describe major network buildout phases, should correspond with the information provided in the Capital Investments Workbook Summary and Depreciation Schedules.

1.1 Time Period – Select the year in which the project milestone is anticipated to occur. Insert more rows as needed by clicking on Add New+.

1.2 List All Relevant Milestones – Consider such project areas as:

- Network design.
- Acquisition of all relevant licenses and agreements.
- Site preparation.
- Equipment procurement.
- Inside plant deployment.
- Outside plant deployment.
- Equipment deployment.
- Network testing.
- Network both complete and operational.
- Any other milestones that showcase progress.

1.3 Support for Reasonableness/Data Points – Explain how the milestones lead to eventual project completion. Provide data that demonstrate the reasonableness of these milestones and substantiate the ability to reach the milestones by the time periods indicated. In this section, you should also describe the key challenges, if any, to a timely completion of the project, and describe your mitigation plans.

1.4 Supplementary Data: If you need more space for any reason, you can upload an additional attachment in the Documents Tab. Scroll down to the Additional Attachments bar and click "Upload." For Category, select "Construction." For Document Type, select "Buildout Timeline and Milestones." Enter a short description of this additional attachment and upload the file.

2. Capital Investment Workbook Subtab

The Capital Investment Workbook (CIW) subtab allows you to list your project costs in detail. The purpose of this subtab is to break down the specific costs involved in your project and categorize them. This includes all proposed construction costs using RUS funds and non-RUS funds. A CIW must be completed for each funded and/or unfunded service area in which you are proposing system improvements or additions. Associate common network elements with the Service Area in which they will be physically located. Use the Unit Cost and Number of Units fields to further break down the costs. You may round the Unit Cost to the nearest $1.00. When multiple items are included in one "unit," use the description column to provide enough detail that the reviewers can easily see how you arrived at that unit cost (you should also provide supplemental attachments to support the costs).

Use the following as a guide to the budget categories:

Project Assets	Drop-down Examples
Network & Access Equipment	Switching, Routing, Transport, Access, Other, Optical Network Terminal
Outside Plant	Cables, Conduits, Ducts, Poles, Towers, Repeaters, Other
Building & Land	New Construction, Pre-fab Huts, Improvements and Renovations, Other
Customer Premises Equipment	Modems, Set Top Boxes, Inside Wiring, Other
Billing & Operational Support Systems	Billing Support, Customer Care, Other
Operating Equipment	Vehicles, Other Equipment/Furniture, Other
Professional Services	Engineering Design, Project Management, Consulting, Other
Testing	Network Elements, IT System Elements, User Devices, Test Generators, Servers/Computers
Other Upfront Costs	Site Preparation, Other

2.1 Complete items 2.1.1 – 2.1.10 for each applicable category. Save the Workbook, then add other Project Workbooks as needed. Each service area must have a corresponding completed workbook.

2.1.1 For each category, as needed, add new rows to capture all relevant Project Assets.
2.1.2 Project Assets: Specify the asset in the drop-down list.
2.1.3 Description: Enter a descriptive name for each capital item or group of items.
2.1.4 Common Network Facility: Yes/No
2.1.5 Unit Cost: Enter the cost per unit of the specified asset.
2.1.6 No. of Units: Enter the number of units that will be constructed and/or installed for the project.
2.1.7 Total: Automatically calculated by multiplying unit cost and number of units.
2.1.8 RUS Funded Costs: Enter the portion of the Total that will be drawn from the requested loan.
2.1.9 Non-RUS Funded Costs: Enter the portion of the Total that will be drawn from other funding sources.
2.1.10 Totals: Automatically summed for each category.

2.2 **Telecommunications Plant Retired**

For each prefilled category, enter the original cost or estimated salvage value for years 1-5. The retired plant must include all outside plant facilities and electronics to be retired whether or not the route is abandoned. For instance, proposed Fiber-to-the-Premises (FTTP) overbuilds will have little or no use for existing copper routes and associated equipment.

2.3 **Service Miles**

Please provide the net system mileage. For this purpose, a route may include one or more types of facilities, such as aerial and buried plant, and may include facilities for distribution, toll service, and EAS. The facilities along both sides of a road are generally considered to be along the same route. An exception to this would be a case in which there are limited access highways or other streets where separate facilities are installed to serve on each side because crossings are prohibited or undesirable. Microwave or radio links are considered separate routes. Service drops off the main route are considered as additional

route mileage. See below for descriptions of each mile type.

2.3.1 **Route Miles.** Route miles of facilities are automatically calculated based on the information that you manually enter in the rows that follow. The net total in the upper right hand column is the sum of the existing, modified, and new route miles, minus the route miles to be relinquished.

2.3.2 **Existing Miles.** Route miles are considered "existing" only for miles of facilities in place at the time that the report is prepared. Do not include modified miles in this calculation.

2.3.3 **Modified Miles.** Route miles are considered "modified" when existing plant is reinforced or replaced with new facilities along the same route.

2.3.4 **New Miles.** Route miles are considered "new" when facilities will be built along routes that you have not formerly established.

2.3.5 **Route Miles Relinquished.** Route miles are considered "relinquished" when all the facilities along the route are no longer used. This also applies to plant that has been retired-in-place due to high removal costs.

2.4 **Tower Sites**

2.4.1 Existing Tower Sites: Enter the number of tower sites present at the time of application. If any tower sites will be removed from service in a given year, reflect this as a negative number.

2.4.2 New Tower Sites: Enter the number of tower sites constructed for years 1-3. Only enter the number of additional towers constructed for the specified year. Do not enter aggregate data.

3. Capital Investment Workbook Summary Subtab

This subtab automatically aggregates the CIWs created in the previous subtab to summarize the costs for the total system. Please review the data after the CIWs for each service area are complete.

4. Depreciation Schedule Subtab

This subtab must include all of the depreciable CIW equipment and facilities that are funded by RUS. Do not include Non-RUS Funded Costs on this Depreciation subtab. You will be able to provide that information on the next subtab, if applicable.

Use the following as a guide for the depreciable equipment and facilities:

Project Assets	Drop-down Examples
Equipment	Switching, Routing, Transport, Access, Video, Power, Satellite, Engineering, Other, Optical Network Terminal
Outside Plant	Copper, Coaxial, Fiber, Submarine Cable, Conduit Systems, Engineering, Other
Building	New Construction, Pre-fab Huts, Improvements, Renovations, Engineering, Other
Towers	Guyed, Lattice, Monopole, Site Preparation, Engineering, Other

Customer Premises Equipment	Video Set Top Boxes, Modems, Inside Wiring, Multi-Terminal Adaptor, Engineering, Other
Operating Equipment	Vehicles, Other Equipment/Furniture, Billing System, Test Equipment, Generators, Engineering, Other

4.1 **Depreciation Rate.** Use the manufacturers' recommended useful life of asset to determine the percentage to enter into the Depreciation Rate field. RUS will determine whether the applicant's asset depreciation rates are acceptable.

4.2 **Composite Economic Life.** RUS will calculate the expected composite economic life of Broadband Loan Project-funded assets based on the acceptable depreciation rates. Applicants cannot generally request a loan term that exceeds the composite economic life of project assets funded by a Broadband Loan. Additionally, the Pro Forma Financial Forecast must reflect a loan amortization which is less than or equal to the composite economic life of the Broadband Loan-financed assets.

4.3 All Project Assets are organized into six categories. The Grand Totals section automatically calculates the total costs for each year of the project buildout. For each category, add new rows to capture all relevant Project Assets, as needed.

4.3.1 Project Assets: Specify the asset in the drop-down list.
4.3.2 Depreciation Rate: Enter the rate you are proposing to use by plant category.
4.3.3 Years 1-5: Enter the cost of the Project Asset in the construction process as it applies to each year.

5. Depreciation Prior Loans Subtab (if applicable)

If you answered yes to the question in the Interview Tab about completing construction for a previous RUS loan during the 5-year forecast period, please include all of the Project Assets and associated costs that are being funded for that project. The same guidance listed for the Depreciation Schedule applies, but is specific to the Project Assets funded by these prior loans.

6. Depreciation Non-Loans Subtab (if applicable)

If you answered yes to the question in the Interview Tab about the use of non-loan funds during the 5-year forecast period and identified non-RUS funded costs in the CIW Summary, then you must include all of the CIW Project Assets that are NOT funded with RUS-Funds in this subtab. Do not include RUS Funded Costs on the Depreciation Non-Loans Schedule. The same guidance listed for the Depreciation Schedule applies, but is specific to the Project Assets funded by non-RUS loans.

G. Acquisitions Tab (if applicable)

Purpose: To provide contact and cost information related to the selling company and the assets to be acquired.

Related Screens: Interview Tab; Loan Request Tab; Service Area(s) Tab; Construction Tab; Financials Tab; Documents Tab

If you selected "Acquisition" as a component in the Nature of Network Changes on the Interview

Tab, identify whether you are planning to acquire more than one Company and/or Physical Asset. If you answer yes, the screen will double to provide spaces for the second acquisition. All items with a red asterisk (*) are required fields.

1. *Selling Company Name: Enter the name of company that you are buying or from which you are purchasing an asset.
2. *Company Address: Provide the seller's address.
3. *Organization Type: Select the choice that best describes the legal structure of the selling company, as applicable.
4. *Proposed Purchase Price: Enter the specified amount.
5. *Acquisition Type: Select the choice that best describes the acquisition.
6. System Description – Respond to items relevant to the acquisition using quantitative data.
7. List of All Counties Served Area to Be Acquired – If the acquired service area covers more than one county, click on "Add New +" to add fields. Type in one county per field.

H. Financials Tab

Purpose: To provide information on the applicant's subscribers, services, and financial outlook, so that RUS can determine financial feasibility.

Related Screens: Subscriber Projections Subtab; Non-Operating Revenue Subtab; Balance Sheet Subtab; Income Statement Subtab; Cash Flows Subtab; Debt and Equity Funding Subtab; Loan Request Tab; Service Area(s) Tab; Construction Tab; Documents Tab

This tab reviews your financial data and 5-year business plan, or the pro forma financial forecast. The Subscriber Projections Subtab focuses on the revenue that you expect to gain, whereas the remaining subtabs determine whether you can maintain financial solvency while paying back the loan according to the original terms and conditions.

The financial forecast must cover 5 years and be inclusive of ALL operations, both existing and proposed. This information will be used by RUS to determine whether the loan can be repaid on its terms, whether the proposed project is financially feasible and sustainable, and whether this is a viable operation. The projections should be detailed, taking into account your best estimates for start-up costs (if any), revenues, expenses, profitability, and all financial data related to any subsidiaries. The financial forecast includes **5 subtabs**:

- Non-Operating Revenue.
- Balance Sheet.
- Income Statement.
- Statement of Cash Flows.
- Debt & Equity Funding.

Key financial ratios that are automatically calculated in RD Apply are Times Interest Earned Ratio (**TIER)** and Debt Service Coverage Ratio (**DSCR)**. Both ratios are calculated by the system on the Income Statement.

- **TIER** = (Total Net Income + Total Fixed Charges) ÷ (Total Fixed Charges)

- **DSCR** = (Total Net Income + Total Fixed Charges + Depreciation Expense + Amortization Expense) ÷ (Interest on Funded Debt + Other Interest Expense + Principal Payments on

Long-Term Debt and Capital Leases)*
*Be sure to enter data for *Principal Payments on Long-Term Debt and Capital Leases* on the Income Statement for each year that Principal Payments have been made. Otherwise, the DSCR will be skewed.

1. Subscriber Projections Subtab

On this subtab, provide the number of existing and proposed subscribers and all existing and proposed service packages and rates for each of the service areas you submitted via the Service Area(s) Tab. The total service offerings included on the Subscriber Projections should tie to what is included under the Local Network Service Revenues on the Income Statement. Do not include subscriber numbers or service offerings that are actually associated with or being offered by an affiliate or subsidiary. Those revenues should be included on the Non-Operating Revenue Subtab.

1.1 If your application features more than one kind of service offering, click the 'Add New+' button. Complete the following steps for each service package.

1.1.1 Select Area(s): Check one or more service areas that you want to describe.
1.1.2 Service Offering: Select the choice that best describes the type of service that is or will be provided in the selected service area(s).
1.1.3 Service Level Offering: For voice, enter the type offered, e.g., VOIP; for video, enter the package offered, e.g., bronze, silver, or whatever names your company uses to identify its service packages; for data, enter the speed offered, e.g., X Mbps down/Y Mbps up.
1.1.4 Residential or Business: Select the choice that best describes the end user.
1.1.5 Current Subscribers: Enter the number of existing subscribers that currently receive this service offering in the selected service area(s).
1.1.6 Years 1-5: Enter the number of subscribers that you expect to sign-up on an **aggregated** basis. For example, if a company has a hundred (100) current subscribers and expects to acquire twenty (20) additional subscribers each year for the next five years, the numbers should be entered like this:

Table 3: How to Enter Cumulative Subscriber Data

Current Subscribers	Year 1	Year 2	Year 3	Year 4	Year 5
100	120	140	160	180	200

1.1.7 Price/Month: Enter the monthly cost of this service package in this service area.
1.1.8 Totals by Service Offering: Automatically calculates revenue estimates based on the data above.

1.2 <u>Market Survey Requirement</u>

If, by the end of the 5-year forecast period, you are projecting a penetration rate that is **less than 20 percent** in a given service area for any service offering, you are not required to complete a market survey for that service area for that service offering. For example, if you are projecting a penetration rate of 30 percent for data services and 15 percent for video services in a particular service area, you only have to complete a market survey for the data services in that service area.

However, if your proposed penetration rate requires that you conduct a market survey, RUS recommends that your survey include questions about all service offerings. Please note that proposed prices for those services with projected penetration rates that are less than 20 percent must be affordable, as determined by RUS. The Administrator may modify the requirements of the market survey for loans in service areas that are "unserved" when it is in the best interest of the Agency.

1.3 Market Survey Timing

You must complete the Market Surveys within the 6 months preceding your application submission date. For example, if you submit your application on Dec. 1, 2016, the Market Survey must be **clearly dated** as having taken place between June 1, 2016 and November 30, 2016. Additionally, if the demographics of the proposed service area have significantly changed since the survey was completed, RUS may require an updated market survey.

2. Non-Operating Revenue Subtab

In recent years, we have seen many of our applicants generate a significant portion of their net income from non-operating and non-regulated income. Although we ask you to enter data from these other income streams in your 5-year financial forecast, we also want to see these non-operating and non-regulated income streams further broken down into their components. As a result, separate 5-year forecasts for these other incomes must be included in the loan application and submitted to RUS. With as much detail as possible, explain the types of incomes, the basis for the projections, and all assumptions used for the projections.

2.1 If these incomes are from affiliated companies, then you must do the following:

2.1.1 Provide as much information as possible about the affiliated companies.
2.1.2 Explain any significant increases or decreases in income in detail.
2.1.3 Include all leases and/or agreements with affiliated companies that are related to these revenues on the Attachments Subtab.

2.2 If these incomes are subscriber driven, such as video, phone, or internet, then you must provide a projection of subscriber numbers along with revenue per unit to substantiate the forecast.

2.3 If you have non-operating revenues or expenses to report, mark "Yes" and complete the revenue and expense schedules. Select the 'Add New+' button to add additional rows to the schedules. Sample item descriptions to include in this subtab could be "Capital Gains (Losses)" or "Gain (Loss) Sale of Equipment." The subtab will automatically calculate the totals for the Non-Operating Net Income. These annual totals will carry over to Line #16: Non-Operating Net Income on the Income Statement.

2.4 If you have no non-operating revenues or expense to report, mark "No." Zeros will automatically populate each field.

3. Balance Sheet Subtab

The "Year of Application" refers to the year that you anticipate implementing the proposed project. If you are submitting your application during the first three quarters of the calendar year (January-September), select the current year as the "Year of Application." If you are submitting the application in the fourth quarter of the calendar year (October-December), select the succeeding year as the "Year of Application." For instance, if your application submission date is September 30, 2017, your Year of Application is 2017. If your application submission date is October 1, 2017, your Year of Application is 2018.

Using the example in which you submit your application in the fourth quarter of calendar year 2017, note that the columns labeled "Previous Year" now display years 2014-2017. Since 2017 is now considered the first "Previous Year," use your most current financial information and annualize the data to model your best estimate for 2017 year end data. Under the Attachments Subtab, you would still submit your financial statements for the three most recent fiscal years, which in this case would be years 2014, 2015, and 2016. If submitting unaudited data, you must also attach the tax returns corresponding with those years. According to this scenario, you must submit the 2017 financial information to RUS as soon as the statements are available. **Please note that you may only modify the "Year of Application" twice before the selected year is locked in the system.**

If you are submitting information that includes **both** historical data and forecast data for portions of the Year of Application, please note this information in the Financial Assumptions and provide a breakdown between actual and forecast data.

Equity. In order to meet the minimum equity requirement, the amount entered on the Total Equity line item for Previous Year 1 on the Balance Sheet Subtab must be equal to at least 10 percent of the requested loan amount. Be sure to check that the amount of total equity listed here is the same as the amount listed on the historical financial statements that you are submitting as attachments. If the total equity is less than 10 percent, you must submit an Investor Proposal or a State/Local Government Bond, as detailed in this section of the Guide.

The pro forma Balance Sheets must comply with basic GAAP requirements, in which Total Assets equals Total Liabilities plus Total Equity. Loans must be reflected with current and long-term positions for each pro forma year. Use the following as a guide to the pre-populated balance sheet categories contained on the Balance Sheet Subtab.

Assets	
Current Assets	
Cash and Equivalents	Includes all restricted and non-restricted cash balances.
Cash - RUS Construction Fund	
Accounts Receivable - Affiliates	Consists of amounts owed by Affiliated Companies from the provision of services or the sale of equipment.
Accounts Receivable - Non-Affiliates	Consists of amounts owed by customers and subscribers from the provision of services or the sale of equipment.
Notes Receivable - Affiliates	Debt owed to Applicant by Affiliated companies and repayable within one year. Be sure to provide detail such as repayment terms in the Assumptions.
Notes Receivable - Non-Affiliates	
Interest and Dividends Receivable	
Materials and Inventory	Consists of equipment available for project deployment or for sale to customers.

Other Current Assets	Consists of all other current assets not included above, including, but not limited to, Prepaid Expenses.
Total Current Assets	Automatically calculated.
Non-Current Assets	
Investment in Affiliated Companies - Rural Development	
Investment in Affiliated Companies - Non-Rural Development	
Other Noncurrent Assets	Consists of all other Non-Telecom Plant Property & Equipment related long term assets, including, but not limited to Investments in Non-Affiliated Companies.
Total Noncurrent Assets	Automatically calculated.
Plant, Property, & Equipment	
Telecom, Plant-in-Service	Contains all the property and equipment at cost including plant associated with the proposed Broadband Loan project. Annual changes to this category should relate to the *Net Capital Expenditures* category included on the Statement of Cash Flows.
Plant Under Construction	
Plant Adj., Nonop Plant & Goodwill	
Less Accumulated Depreciation	
Net Plant	Automatically calculated.
Total Assets	Automatically calculated.
Liabilities and Equity	
Current Liabilities	
Accounts Payable - Affiliates	Consists of the amounts owed to trade vendors providing good and services who are affiliated companies.
Accounts Payable - Non-Affiliates	Consists of the amounts owed to trade vendors.
Notes Payable-Affiliates	Loans from affiliated companies due within one year.
Notes Payable - Non-Affiliates	
Current Mat. L/T Debt RUS, RTB and FFB Notes	
Current Mat. L/T Debt-Other	
Current Mat. L/T Debt-Rural Develop. Loan	
Current Mat.- Capital Leases	
Lines of Credit	
Other Current Liabilities	Consists of all other current liabilities not included above.
Total Current Liabilities	Automatically calculated.
Long Term Debt	
Funded Debt - RUS, RTB, and FFB Notes	
Funded Debt - Other	Consists of the total outstanding principal balance of all other loans less the *Current Portion - Other Debt* category.

Funded Debt - Rural Develop.	
Obligations Under Capital Lease	
Other Long-Term Debt	Include Advances from Affiliates.
Total Long Term Debt	Automatically calculated.
Other Liabilities & Deferred Credits	
Other Long-Term Liabilities and Deferred Credits	
Total Liabilities	Automatically calculated.
Equity	
Capital Stock Outstanding & Subscribed	Consists of the par value of capital stock.
Additional Paid-in Capital	Consists of all other capital stock transactions, less the amounts in *Capital Stock.*
Membership and Cap. Certificates	
Patronage Capital Credits	Represents earnings that have been designated for distribution to cooperative owners.
Retained Earnings	Represents after-tax profits in the company. The changes from year to year must reconcile with the *Net Income* category included on the Income Statement.
Total Equity	Automatically calculated.
Total Liabilities & Equity	Automatically calculated.
Total Equity % of Total Assets	Automatically calculated.
Current Ratio	Automatically calculated.

4. Income Statement Subtab

Use the following as a guide to the pre-populated revenue and expense categories contained on this subtab.

Revenue Items	
Local Network Services Revenues	Automatically calculated.
Broadband	Revenues are derived from the provision of broadband data services to customers. Broadband data service revenues should relate to the number of subscribers and price per subscriber information contained on the Subscriber Projections Subtab.
Voice	Revenues are derived from the provision of local voice services to customers. Local voice service revenues should relate to the number of local voice service subscribers and price per subscriber information contained on the Subscriber Projections Subtab. This should include revenue from residential, single-line businesses, multi-line businesses, and optional features.

Video	Revenues are derived from the provision of video services to customers. Video service revenues should relate to the number of video service subscribers and price per subscriber information contained on the Subscriber Projections Subtab. This should include basic, expanded basic, and digital subscribers; set-top box revenue; and premium channel packs and video on demand.
Other	Includes Installation revenues.
Network Access Services Revenues	If you receive or expect to receive Network Access Revenues, then you must include the revenue figures here.
Federal Subscriber Line Charges	
Federal Access Recovery Charges	
Federal High Cost Loop Support /Model Based Support	Modified Legacy or Model Based Support.
Federal Interstate Common Line Support/CAF-BLS	Connect America Fund-Broadband Loop Support (CAF-BLS).
State Support	
Connect America Fund Intercarrier Compensation	
Interstate Switched Access Revenue	
Intrastate Switched Access Revenue	
Interstate Special Access Revenue	
Intrastate Special Access Revenue	
Long Distance Network Services Revenues	Revenues are derived from the provision of toll/long distance services and should relate the minutes of usage applied against average rates per minute.
Carrier Billing and Collection Revenues	
Other Operating Revenue	All other revenues derived from sources other than those described above.
Uncollectable Revenues	The estimated amounts of revenue that you will not be able to collect.
Net Operating Revenues	Automatically calculated.
Expense Items	
Plant Specific Operations Expense	
Plant Nonspecific Operations Expense (Excluding Depreciation & Amortization)	
Depreciation Expense	
Amortization Expense	Amortization expense associated with intangible assets.

Customer Operations and Corporate Operations Expenses	Total expenses of personnel, related costs of providing customer care operations to customers and subscribers, occupancy, insurance, billing and collections, and other general and administrative expenses.
Other Operating Expense	All other operating expenses not included above.
Total Operating Expenses	Automatically calculated.
Operating Income or Margins	Automatically calculated.
Non-operating Net Income	Automatically calculated.
Interest on Funded Debt	Includes RUS funded debt.
Other Interest Expense	Includes Capital Lease and interest paid to Affiliates.
Allowance for Funds Used During Construction	
Total Fixed Charges	Automatically calculated.
Taxes	Total expenses incurred for state and local property taxes, plus the provision or benefit for Federal and state income taxes related to a for-profit applicant.
Extraordinary Items	
Total Net Income or Margins	Automatically calculated.
Other	
EBITDA	Automatically calculated.
EBIT	Automatically calculated.
Principal Payments on Long-Term Debt and Capital Leases	Principal payments made on debt obligations plus capital leases during the subject year.
TIER	Automatically calculated.
DSCR	Automatically calculated.

5. Statement of Cash Flows

The pro forma statement of cash flows must reflect the proposed Broadband Loan project funding and investments. This statement also reflects any additional funding for working capital and other capital expenditures you intend to use, even if they are not related to the Loan project. The Cash Flow statement corresponds with the Balance Sheet and Income Statement in RD Apply. Therefore, you may only manually input values for the following line items: Net Capital Expenditures, Other Long-Term Investments, Less: Distributions, and Other Financing, Investing, and/or Operating Activities. Use the following as a guide to the pre-populated cash flow categories contained on this subtab.

Cash Flow Statement Items	
Beginning Cash (Cash & Cash Equivalents plus RUS Const. Fund)	Automatically calculated. Ending Cash from the Prior Year Cash Flow Statement.
Cash Flow from Operating Activities	
Net Income (Loss)	Automatically calculated. Obtained from the *Net Income (Loss)* category on the Pro Forma Income Statement for the specified years.
Adjustments to Reconcile Net Income (Loss) to Net Cash Provided by Operating	

Activities	
Add Depreciation	Automatically calculated. Obtained from the *Depreciation* category on the Income Statement.
Add Amortization	Automatically calculated. Obtained from the *Amortization* category on the Income Statement.
Other (Explain)	Manual Input. Include other adjustments for non-cash revenue (such as Amortized Grant Revenue) or non-cash expenses.
Changes in Operating Assets & Liabilities	
Decrease/(Increase) in Accounts Receivable	Automatically calculated. (PRIOR YEAR Balance Sheet Lines 3 + 4) - (END OF PERIOD Balance Sheet Lines 3 + 4).
Decrease/(Increase) in Materials and Inventory	Automatically calculated. (PRIOR YEAR Balance Sheet Line 8) - (END OF PERIOD Balance Sheet Line 8).
Decrease/(Increase) in Other Current Assets, Interest, and Dividend Receivable	Automatically calculated. (PRIOR YEAR Balance Sheet Lines 7 + 9) - (END OF PERIOD Balance Sheet Line 7 + 9).
Increase/(Decrease) in Accounts Payable	Automatically calculated. (PRIOR YEAR Balance Sheet Lines 21 + 22) - (END OF PERIOD Balance Sheet Lines 21 +22).
Increase/(Decrease) in Other Current Liabilities	Automatically calculated. (PRIOR YEAR Balance Sheet Line 30) – (END OF PERIOD Balance Sheet Line 30).
Net Cash Provided/(Used) by Operations	Automatically calculated. Sum of Operating Activities.
Cash Flow from Investing Activities	
Net Capital Expenditures	Manual Input.
Other Long-Term Investments	Manual Input.
Other Noncurrent Assets	Automatically calculated. (PRIOR YEAR Balance Sheet Line 13) - (END OF PERIOD Balance Sheet Line 13).
Other (Explain)	Manual Input.
Net Cash Provided/(Used) by Investing Activities	Automatically calculated. Sum of Investing Activities.
Cash Flow from Financial Activities	
Decrease/(Increase) in Notes Receivable	Automatically calculated. (PRIOR YEAR Balance Sheet Lines 5 + 6) - (END OF PERIOD Balance Sheet Lines 5 + 6).
Increase/(Decrease) in Notes Payable & Lines of Credit	Automatically calculated. (PRIOR YEAR Balance Sheet Lines 23 + 24 + 29) - (END OF PERIOD Balance Sheet Lines 23 +24 + 29).

Net Increase/(Decrease) in Long Term Debt (Including Current Maturities)	Automatically calculated. (PRIOR YEAR Balance Sheet 25 + 26 + 27 + 28 + 32 +33 +34 + 35 + 36) - (END OF PERIOD Balance Sheet Lines 25 + 26 + 27 + 28 + 32 +33 +34 + 35 + 36).
Increase/(Decrease) in Other Liabilities & Deferred Credits	Automatically calculated. (PRIOR YEAR Balance Sheet Line 38) – (END OF PERIOD Balance Sheet Line 38).
Increase/(Decrease) in Capital Stock, Paid-in-Capital, Membership and Capital Certificates, & Other Capital	Automatically calculated. (PRIOR YEAR Balance Sheet Lines 40 + 41 + 42) - (END OF PERIOD Balance Sheet Lines 40 + 41 + 42).
Less: Distributions (Payment of Dividends, Patronage Capital Credits Retired, or any other Distribution)	Manual Input.
Other (Explain)	Manual Input.
Net Cash Provided/(Used) by Financial Activities	Automatically calculated. Sum of Financial Activities.
Net Increase/(Decrease) in Cash	Automatically calculated.
Ending Cash	Automatically calculated. **Ending Cash represents cash balances at the end of the period and should agree with the *Cash* category of the Balance Sheet.**

6. Debt and Equity Funding Subtab

This subtab records all existing long-term liabilities, loans, and capital leases as well as any new non-RUS funding sources that will be needed to fund the Broadband Loan project, working capital, and any other capital projects planned during the forecast period. Complete this subtab along with all of the required documentation, as listed below. If you need to make any modifications, you must attach an explanation. Use this subtab as a checklist to confirm that you have submitted all the supporting documentation needed for each source of external funding.

For each long-term debt or obligation, include a description of the loan, principal amount, annual interest rate, term, number of payments, annual payment amount, and start date. You must also include the total amount of Advances and Repayments for each year of the pro forma that loan funds are disbursed and/or repaid. This allows the system to calculate the total Change in Long Term Debt which must now match line item 19 on the Cash Flow Statement: Net Increase/(Decrease) in Long Term Debt (Including Current Maturities). Additionally, the Total Advances of the Proposed Loan Request Section must match the Total Loan Amount Requested on the Loan Request Tab.

6.1 The subtab is broken into five Long-Term Debt sections and one Equity section:

6.1.1 Long-Term Debt
Long-term Debt Obligations – USDA Rural Development
Long-term Debt Obligations – Existing USDA RUS
Long-term Debt Obligations – Proposed Loan Request
Long-term Capital Lease Obligations

Funded Debt – Other

6.1.2 Equity
Equity Contributions

6.2 Proposed Non-RUS Funding Sources. Enter other funding anticipated to support your application's pro forma financial statements. Non-Broadband Loan funding for the capital budget and working capital should include documentation of equity, debt, or other contributions (such as in-kind contributions), including a list of the committed sources of capital funding. A brief description of each should be included. Do not list the requested Broadband Loan here. For other contributions, you must provide documentation supporting the cash valuation of each contribution.

6.3 Required Documentation. You must submit documentation substantiating any funds listed in the Schedule of Debt and Equity Funding for all existing debt and obligations and all forms of external non-Broadband Loan funding used to fund the proposed project. The documentation must substantiate the outstanding debt, obligations, and external non-Broadband Loan funding for **your** organization, not other entities, such as parents or affiliates. Please note that the source documentation must also reflect any co-applicants.

To provide evidence of existing debt, include copies of existing notes, loan and security agreements, guarantees, and capital leases. To provide evidence of external funding, include copies of all formal commitments from your parent company, investors, and/or third parties, such as commitments of funding from banks, evidence of loan agreements, and signed agreements from the board of directors. If a parent company is providing funding or any other support, proof of such support is required.

I. Competition Tab

Purpose: To identify all existing service providers and resellers competing in the applicant's service areas and their service offerings and pricing.

Related Screens/Subtabs: Subscriber Projections Subtab; Service Area(s) Tab; Documents Tab

This subtab requires a market analysis of all existing service providers, including cable TV operators, regardless of the existing provider's market share of the applicant's service area, for each type of service the applicant proposes to provide. Complete the following steps for each competitor and relevant service offering(s).

1. Select Area(s): Check one or more service areas that the specified service offering covers.
2. Competitor Name: Enter the name of the competing entity.
3. Service Offering: Select the choice that best describes the type of service that your competitor provides in the selected service area(s).
4. Service Level Offering: For voice, enter the type offered, e.g., VOIP; for video, enter the package offered, e.g., bronze, silver, or whatever names the company uses to identify its service packages; for data, enter the speed offered, e.g., 10 MB/1MB, download/upload speed, respectively.
5. Residential or Business: Select the choice that best describes the end user.
6. Price/Month: Enter the monthly cost of this service package in this service area.

J. Environmental Tab

Purpose: To ensure project compliance with 7 CFR 1970, Environmental Policies and Procedures.

Related Screen: Documents Tab

You must complete a workbook for each funded/unfunded service area that has a corresponding CIW. Note the facilities that are to be deployed and their status under 7 CFR 1970. Please refer to the below table to help determine when additional information, including agency contacts, is required. Describe the projects in the workbook for each service area and upload any required supplemental information.

If you are applying to do this for your project:	Then, these are the anticipated environmental review requirements and the categorical exclusion that would likely apply:
1. Outside Plant	
a. Buried cable	1970.53(d)(2); 1970.54(b)(4) depending on if new or replacement. If using 1970.53(d)(2), no further action for NHPA is required. If using 1970.54(b)(4), need to contact SHPO and tribes for S106 review. Need to avoid wetlands or identify why project must be in a wetland.
b. Aerial cable – existing cable, possibly with new poles	1970.53(d)(1); 1970.54(b)(4) depending on if new or replacement. If using 1970.53(d)(2), no further action for NHPA is required. If using 1970.54(b)(4), need to contact SHPO and tribes for S106 review.
c. Underground cable	1970.53(d)(2); 1970.54(b)(4) depending on if new or replacement If using 1970.53(d)(2), no further action for NHPA is required. If using 1970.54(b)(4), need to contact SHPO and tribes for S106 review. Need to avoid wetlands or identify why project must be in a wetland.
2. Towers	
a. New construction	1970.54(a)(6), if under 450 feet and not visible from areas of documented scenic value. Will need to consider impacts to prime farmland and listed species. Maps regarding floodplains and wetlands are generally needed. Need to contact SHPO and tribes for S106 review.
b. Existing towers, equipment collocation only	1970.53(d)(5), no further action for NHPA is required
c. Equipment put on building instead of tower	1970.53(d)(5), no further action for NHPA is required
3. Buildings	
a. New building	1970.54(a)(3) – if it meets other requirements of the categorical exclusion. Will need to consider impacts to prime farmland and listed species. Maps regarding floodplains and wetlands are generally needed. Need to contact SHPO and tribes for S106 review.
b. Modular building	1970.54(a)(3) Need to contact SHPO and tribes for S106 review. Will need to consider impacts to prime farmland and listed species.

	Maps regarding floodplains and wetlands are generally needed.
c. Renovating existing building	1970.53(c)(2) Need to contact SHPO and tribes for S106 review. Impacts of siting project in floodplain may need to be addressed.
4. Equipment	
a. Within existing building	1970.53(c)(2) Need to contact SHPO and tribes for S106 review.
b. Outside in a field	1970.54(b)(4) Need to contact SHPO and tribes for S106 review. Will need to consider impacts to prime farmland and listed species. Maps regarding floodplains and wetlands are generally needed.

Additional Environmental Guidance

Any activity categorized under 7 CFR 1970.54 is a Categorical Exclusion with an Environmental Report. This means all potential extraordinary circumstances must be discussed to some degree, including wetlands and floodplains. For example, applicants should not merely state "no floodplain or wetlands" and end the discussion there. Applications should include supporting information, such as a map. If a resource is present, applicants should describe and support how the project will not have an adverse impact to the resource. For example, if the project is in a floodplain, but there are no above ground structures to be impacted by any floods or there is a wetland in the project area, but the line will be directionally bored under the wetland to avoid any impact, please identify this in your application.

Section 106 review information regarding the National Historic Preservation Act can be found in subpart H of 7 CFR 1970, and **does require** coordination with the State Historic Preservation Office and notification to any federally recognized tribes that have an interest in the area (details and template letters can be found in subpart H).

Endangered Species Act (ESA) review is also generally needed for each project.

Depending on the type of project, a simple commitment may be enough to alleviate any concern. The following steps should be taken to expedite the review:

1. Go to IPaC (link below) and print off an official species list for the area your project impacts. If no species are on the list, include the list and continue.

2. If any species are on the list but based on the type of project, they would **NOT** be impacted, write a short explanation, include it in your report, and move on. This is often the case if you are in an already maintained ROW.

3. If a species is present and **COULD** be affected, such as any species of bat and you are doing tree clearing, more commitments, limitations, or coordination with US Fish & Wildlife Service (USFWS) may be required in order to conclude that the action is "not likely to adversely affect" the species. IPaC may assist you in concluding any consultation with USFWS. Subpart N has more details on ESA requirements.

   Bat and beetle species are the two most likely to be impacted by any of these actions. USFWS has extensive information on what should be done to avoid any adverse impacts and to conclude consultation.

Environmental Guidance on 7 CFR 1970 Subparts	
Subpart B	Categorical Exclusions
Subpart H	Historic and Cultural Resources
Subpart L	Land Use and Formally Classified Land, for more details regarding prime farmland
Subpart N	Biological Resources
IPaC	Assistance for ESA coordination and determinations

K. Documents Tab

Purpose: To upload all required and additional attachments, certifications, and licenses and agreements needed for a complete application.

Related Screens: Interview Tab; Attachments Subtab; Certifications Subtab; Licenses & Agreements Subtab

1. Attachments Subtab

On this subtab, upload the **required attachments** that correspond with the Document Type. In the Description field, type in the same title listed under the Document Type, unless an additional descriptor is needed.

You may upload **optional attachments** if you need to provide any clarifying or supporting material. For example, if you want to add notes to the data entered on the Capital Investments Workbook, you can upload an additional descriptive file in this section. For any documents uploaded under "Other – Misc. Support Document," please include a short, but very clear title in the Description field.

1.1 Legal Opinion.

Prepare the **legal opinion** according to the sample format available in the Appendix. The legal opinion should address your ability to execute legal documents, and describe all pending litigation matters. Your legal counsel must submit an executed opinion on the counsel's letterhead.

1.2 Real Property Schedule.

Prepare a **real property schedule.** The real property schedule should include the legal descriptions of all the real property owned by the applicant and should be in a format suitable for inclusion in a security instrument. It should be categorized into real property, leased-property, easements, and rights-of-way. An attorney practicing in the state where the property is located must prepare this schedule.

1.3 Organizational Charts **(Applicant, Parent, Subsidiary).**

Depending on whether the applicant is connected to parent and/or subsidiary companies, the number of required organizational charts will vary. Sample organizational charts for both

conditions are provided in the Appendix. These are only samples and should be tailored to reflect your organization. Review the instructions below to determine the number of charts to submit.

1.3.1 All applicants, regardless of their relationships, must submit a chart(s) that shows the key personnel who manage or will manage the company and/or this project, and the number of employees in each division or department managed by those personnel. An applicant's organizational chart(s) should reflect both the **company structure** and **key staff**. You may need to submit **more than one** charts.

1.3.2 Applicants with parent and/or subsidiary relationships must submit **additional** charts that show all the other entities (parent/subsidiaries) that are affiliated with the applicant and clearly indicate the relationships between these entities and the applicant. An accompanying narrative should briefly indicate any services that the affiliate will be providing to the applicant or that the applicant will be providing to the affiliate.

1.4 Board Resolution **(First time applicant only).**

This document, which authorizes the funding request, should have already been submitted as part of the Authorized Representative Request (ARR). Sample Board Resolutions for corporations and LLCs are available under the Help link in the top right hand corner of the RD Apply application.

1.5 Articles of Incorporation or Organization **(First time applicant only).**

Submit a certified copy of the Articles of Incorporation or Organization.

1.6 Bylaws or Operating Agreements **(First time applicant only).**

If the applicant is an LLC, or any of the applicant's members are LLCs, the applicant must submit **either** of the following:

1.6.1 LLC agreements for all members of the applicant's LLC.
1.6.2 An opinion of counsel which certifies that the applicant's agreement does not conflict with any of the LLC agreements of the applicant's members.

1.7 Board of Directors or Managing Members.

In this document**,** include a list of your board members and a brief biography that highlights each member's experience within your industry and community.

1.8 Management Experience.

This document must include information on the key personnel who manage or will manage the company and this project. At a minimum, the following information shall be provided for each member of the management team:

1.8.1 Duties and responsibilities related to this project and to any other project.
1.8.2 Detailed description of qualifications, which focuses on how each person's previous 10 years of work experience directly relates to his or her ability to perform the duties

and responsibilities described above.

1.8.3 Resume for each team member detailing positions held during the last 10 years.

1.8.4 Description of the extent to which this management team has worked together. Name particular initiatives or projects, if any, that the team has previously undertaken. Additionally, explain how the management team's skills complement each other.

1.9 Executive Summary.

The Executive Summary should consist of a general discussion indicating the purpose and amount of the proposed construction. It should also include a discussion of immediate and long-range plans for upgrading existing services, providing new types of subscriber services, and any other plans relating to the development of telecommunications service in the area. You must also include a narrative/quantitative explanation that demonstrates how you arrived at the maturity date listed on the Loan Request Tab.

1.10 System Design.

The System Design is an engineering study that includes all the technical information on the existing and proposed systems. Each part should discuss the construction plans in sufficient detail to provide a clear and logical picture of the broadband system. It should give the considerations for utilizing existing network and access equipment and outside plant in the proposed system, plans for reinforcing and expanding existing equipment and plant, and the justifications for the proposed removals and retirements of existing equipment and plant. The narrative must indicate that the project will be complete within 3 years from the day that RUS notifies the applicant that loan funds are available.

To ensure that you do not leave out critical information, we recommend that you follow the heading format identified under each part.

1.10.1 **Existing System (**if applicable). Provide a synopsis of the current network infrastructure, including:

- The current service area(s).
- The types of services offered.
- The number of subscribers per service offered (voice, data, video etc.).
- The types of technologies utilized in the infrastructure (standards-based vs. proprietary) and a discussion of the equipment deployed (switching, transport, and access).
- The total number of establishments served:
  - Wireline establishments passed, if applicable, and a description of the existing outside plant facilities including mileages and plant type(s).
  - Wireless establishments covered, if applicable, and a discussion of the technology used and tower sites deployed.
- A narrative describing current connectivity to your ISPs, video providers, and telephony providers.

1.10.2 **Proposed System.** Provide a synopsis of the proposed network infrastructure, describing the types of technology to be deployed in the funded service area and how the technology will facilitate the offering of service at the Broadband Lending Speed. The synopsis should include:

- The entire service area(s) that will be provided new or improved service as part of the loan, including how any new services area(s), if applicable, will be incorporated into the existing system and what upgrades that will be made to the existing infrastructure.
- The types of services to be offered.
- The types of technologies utilized in the infrastructure (standards-based vs. proprietary) and a discussion of the equipment to be deployed (switching, transport, and access).
- The total number of establishments served. Detail must be provided showing the system deployed will have the ability to offer each household within the PFSAs service at the Broadband Lending Speed or higher. Provide information on the following:
  - Wireline establishments passed, if applicable, and a description of the outside plant facilities to be deployed including mileages and plant type(s), the amount of existing miles modified, if applicable, and the amount of new construction.
  - Wireless establishments covered, if applicable, and a discussion of the technology used and tower sites deployed or upgraded.
  - Wireless establishments to be covered.
- A narrative describing proposed connectivity to ISPs, video providers, telephony providers, and other content providers including any changes to the existing system, if any.
- A description of the design parameters used in engineering the system. Examples include oversubscription percentage, consumption of bandwidth per user, penetration rates, link loss, availability targets, redundancy requirements, and criteria for candidate vendors.
- Address any other subject areas necessary to make as thorough a disclosure as possible, so that network capacity, performance, user loading, technology strengths and weaknesses, etc. can be fairly assessed.

1.11 Network Diagram(s).

Network diagrams are block diagrams that clearly show how the traffic flows through the network from the interconnection points with the backbone service providers to the end user. RUS is familiar with the technologies associated with “last mile” connectivity options to the customer premises. Therefore, in developing diagrams for the proposed network, focus should be on the core network (common network facilities) components.

The diagram(s) must clearly show:

1.11.1 All physical locations where the major network elements are or will be located to the highest known level of detail. This may take the form of postal addresses or latitude and longitude.
1.11.2 The route miles between each network element.
1.11.3 The bandwidth capacity between the network elements.
1.11.4 The types of facilities (fiber, copper, microwave, etc.) that are or will be used for establishing the connection between the network elements and the points-of-connection with the backbone service providers.
1.11.5 The proposed facilities that will provide the interconnection point(s) from the broadband backbone network to the networks of the selected ISP(s), telephony

and/or VOIP provider(s), and any other value-added services that may be provided in the new infrastructure.

1.11.6 Any leased facilities, along with the location of the leased facilities (postal addresses or latitude and longitude) and the providers from which the facilities are being leased.

1.11.7 For Network Diagrams where the level of factual detail to be provided will inhibit the overall understanding of the diagram, applicants may provide a table at the bottom of the diagram providing the remaining technical details to the extent currently known.

In the Appendix are examples of Network Diagrams for the following technologies: Passive Optic Networks (PON), DSL, Hybrid Fiber-Coaxial (HFC), Radio Frequency over Glass (RFOG), and Terrestrial Wireless. Note that the sample Network Diagrams do not display every home or premises passed but will indicate the typical number of connections reaching to each node (as represented with the letter *n*). These sample diagrams are for illustrative purposes only, and are not intended to construe or imply any design characteristics or requirements for a proposed system.

1.12 Acquisition Agreement **(if applicable).**

This contract governs the terms and conditions that bind the parties in an acquisition. For applications that propose to acquire facilities, provide satisfactory evidence for RUS to determine that the acquisition is necessary and incidental to furnishing or improving service at the Broadband Lending Speed in rural areas.

1.13 Research Data **(if applicable).**

You must conduct a market survey in *each* service area in which you are projecting a penetration rate that is greater than or equal to 20 percent for any service offering by the end of the 5-year forecast period. Non-contiguous service areas must be treated separately. We recommend that you list all of the service offerings that you intend to provide in the applicable service areas on the surveys, even if the projected penetration rates for the other service offerings are less than 20 percent.

All market surveys must take place **within the 6 months** preceding the date of application submission. Clearly identify the dates on which you conducted the surveys.

You must capture a representative sample of the residential and business sectors of each service area included in the application, both RUS-Funded and Non-Funded areas. RUS will review your research in conjunction with the feasibility studies and strategic planning goals. This document contains three sections:

1.13.1 Methodology for conducting the market survey. You can conduct your survey through the following media:

- Direct mail.
- Telephone.
- Door-to-door interviews.
- Town Meetings by coordinating with local government officials, the Chamber of Commerce, and/or local TV, radio, and newspapers.

1.13.2 Tabulated results for each service area. Since the market survey collects data from potential subscribers, both residential and business, on the service offerings and the respective rates, your results must include all of the following:

- Total number of surveys sent.
- Total number of respondents.
- Number and percent of responses to each questions.
- Cross-tabulations for income levels, computer ownership, and Internet usage.

1.13.3 Questionnaire used in the market survey. The Market Survey must demonstrate the need for services at the Broadband Lending Speed as well as any other service being offered, support the projected penetration rates and price points for the services to be offered, and support the feasibility analysis. The market survey must address all services (i.e. voice, data, video, etc.) that the Broadband Program will funding. The survey questionnaire used for conducting the market survey should capture the following information:

- Ownership of computers and Internet usage (including time online).
- Existing service provider, types of services offered, rate plans (both price and transmission rates), satisfaction with current provider.
- Proposed services offered by applicant, the respective rate plans (including any one-time fees), and the timeline for providing those services.
- Incentive/introductory packages offered by the applicant.
- Interest in switching service providers and reasons for switching (price, service level, customer service/local presence).
- Economic and social demographics including age, income level, and family/household members.
- Types of broadband services desired by the customer, including data (internet access), voice services, streaming video, interactive video, peer-to-peer, and online gaming. If other, please specify.

1.14 Market Analysis **(if applicable).**

Based on the information provided in the Research Data attachment, you must provide your analysis of the market survey(s). Your analysis should directly support the numbers you entered on the Subscriber Projections Subtab. The analysis must include the following:

1.14.1 Well-organized conclusions that support the projected subscriber levels across the different service levels/rates for each service area for each year of the financial forecast. The results should clearly differentiate business subscribers from residential subscribers. The results should take into account each service area's individual circumstances. The results must be based on the number of households/businesses in each service area, not on the population of the service area.

1.14.2 Clear explanation of the methodology that links the market survey to the final subscriber projections. Projections must be supported by the Research Data provided in this section. While subscriber projections based on population numbers and national/state statistics are not acceptable on their own, you may also draw on any market data gathered with respect to existing and potential competition and the U.S. Census demographics from the Service Area(s) Tab.

1.15 Historical Financial Statements (Applicant, Parent, and/or Subsidiary Operations).

As applicable, attach the following items:

1.15.1 Audited Financial Statements of the applicant for the three most recent fiscal years, or for as long as the applicant has been in business, if less than three years. Historical financial statements for the last three years must also be supplied for each co-applicant. The financial statements must include the balance sheet, income statement, and statement of cash flows, as well as the accountant's letter and the notes to the financial statements. Audited financial statements are preferred. **Please note** that an Audited Financial Statement refers to a full and complete report of the applicant's financial condition, operations, and cash flows, audited and certified by an independent certified public accountant (CPA). Other reports prepared by accounting firms including Compilation Reports or Review Reports cannot be submitted in satisfaction of an audited financial statement; such reports will be considered as company-prepared.

1.15.2 Alternatives to Audited Financial Statements. If audited statements are not available for the last three years, the applicant must submit un-audited financial statements including explanations **and tax returns for those years**. Applications from start-up entities must, at a minimum, provide an opening balance sheet dated within 30 days of the application submission date. A startup entity may also choose to submit a tax return if audited statements are not available, in addition to the opening balance sheet.

1.15.3 Parent Companies, Subsidiaries, Affiliates and Others. If the applicant has a parent company and/or one or more subsidiaries, the historical financial statements for the preceding fiscal year of those entities are also required. If another affiliated or unaffiliated company is providing operations and management services to the applicant, that company's historical financial statements should also be included. Audited financial statements are preferred; however, see the preceding item for acceptable alternatives if audited financial statements are not available.

1.16 Financial Assumptions.

You are required to submit a detailed written narrative that documents the various pro forma financial assumptions used to prepare the Pro Forma 5-year Financial Forecasts. To determine if you are required to submit more than one forecast, review this section.

You must provide a detailed explanation for each of the line items in the pro forma with clear details so that RUS may review and understand the basis for the financial projections. This should include a discussion of any historical trends or anomalies and their impact on the assumptions for the 5-year forecast. Include any calculations or percentage changes in the assumptions **and the reasons for choosing any multipliers or percentage increases/decreases** for the forecast. If the financial forecast is not fully supported by a detailed narrative for every category, it may affect the final decision on the application.

Historical Financial Reconciliation

If there are any gaps or discrepancies between the submitted historical financial statements and the historical data provided in the Pro Forma, then include detailed explanations in the

Assumptions.

Guidance Related to the Pro Forma Financial Assumptions

While you are not required to utilize all of the categories in the Pro Forma Financial Statements, you must include a sufficient level of detail to provide a reasonable understanding of existing and proposed operations, including the proposed Broadband Loan project.

1.16.1 Balance Sheet Assumptions. You must provide assumptions for **ALL** of the categories on the Balance Sheet. Guidance for several specific categories is provided below.

BALANCE SHEET CATEGORY	GUIDANCE
Cash and Equivalents	Cash should tie to the *Ending Cash* category from the *Existing and Project Cash Flow* worksheet. Describe any restricted portions of cash balances. Document the nature of the marketable securities and discuss liquidity of these.
Accounts Receivable-Affiliates	Provide detail on nature of goods or services provided to Affiliated Companies and the terms of payment.
Accounts Receivable- Non Affiliates	Document the calculations used to determine accounts receivable, during the forecast period, including the number of days of outstanding revenue.
Notes Receivable – Affiliates	Provide breakdown by Affiliated Entity and terms such as interest rate and repayment schedule.
Notes Receivable- Non Affiliates	
Material and Inventory	Identify types of inventory, detail inventory balance and assumptions for how many days inventory will be maintained.
Investments in Affiliated Companies – Rural Development	Provide description of investments and method of valuation.
Investments in Affiliated Companies –non- Rural Development	Provide description of investments and method of valuation.
Accounts Payable-Affiliates	Provide description of the goods and services provided by the Affiliated Company.
Accounts Payable-Non Affiliates	Document the calculations used to determine accounts payable during the forecast period, including the number of days of outstanding expenses.
Notes Payable- Affiliates	Provide detail of loans from Affiliates including interest rate and repayment terms.
Funded Debt- Other	Amounts should be as described in D/E tab and supported by copies of loan documents for all non-RUS, RTB & FFB debt.

Other Long Term Liabilities & Deferred Credits	Disclose amounts of Deferred Taxes and description of transactions that give rise to this tax treatment.
Capital Stock and Additional Paid in Capital	These should consist of the contributed equity of the applicant plus any *Proceeds from Sale of Equity* from the *Existing and Project Cash Flow* worksheet.

1.16.2 Income Statement Assumptions. You must provide assumptions for **ALL** of the categories on the Income Statement. Guidance for documenting assumptions about most specific categories is provided on the following pages.

REVENUES	GUIDANCE
Broadband Data Service	Document the number of broadband data subscribers and average revenue per subscriber (ARPU) information used in determining broadband data revenue.
Local Voice Service	Document the number of local voice service subscribers and ARPU information used in determining local service revenue.
Video Service	Document the number of video service subscribers and ARPU information used in determining video services revenue.
Other	Document the related gross subscriber additions and proposed installation fees.
Network Access Service Revenues	Applicants which receive or expect to receive Network Access Revenues, must include the revenue figures here.
Long Distance Network Services Revenue	Document the historical and projected long distance minutes of use by category and the proposed /long distance rates.
Other Operating Revenues	Note any material amounts and explain the source of this revenue. Document assumptions related to these revenue sources with justification to support the projected revenues.
Uncollectible Revenues	Document the rate used to estimate uncollectible revenues, with justification to support the projection.

EXPENSES	GUIDANCE
Plant Specific Operations Expense	Document how these expenses are calculated and projected through the forecast period and relate to the proposed project buildout.
Plant Non-Specific Operations Expense	
Customer and corporate Operations Expenses	Document how these expenses are calculated and projected. Please disclose if these expenses are being paid to Affiliated Companies and describe allocation method if facilities and staff are being shared. Arrangements should be supported by written agreements between related entities.

Other Operating Expense	Describe major/material components of this line item and document in detail any assumptions related to these operating expenses.
Non-Operating Net Income	Describe sources of income and expense in the Non-Operating tab and provide assumptions and explanations for forecast trends. Explain any non-recurring or extraordinary items.
Interest on Funded Debt	Ensure that this figure includes all debt included on the Debt and Equity Funding Subtab and document the interest rate(s) assumed for all other existing and proposed debt incurred by the Applicant.
Other Interest Expense –	Describe other interest expenses and disclose amounts paid to Affiliates.

1.16.3 Statement of Cash Flows Assumptions. The Cash Flow statement should tie to the net change in the various categories from the Balance Sheet. Net Income in each year should come directly from the Income Statement. Guidance concerning what should be included in the assumptions is outlined below.

CASH FLOWS FROM OPERATIONS	GUIDANCE
Cash Flow from Operations- Other	Provide breakdown of major/material components in this line items and explain any adjustments.

CASH FLOWS FROM INVESTING ACTIVITIES	GUIDANCE
Net Capital Expenditures	Ensure that proposed Broadband Loan project expenditures match the network build-out schedule and Capital Investment Workbook tab. Document the assumptions regarding capital expenditures for assets other than those being funded with the proposed Broadband Loan.
Other	Provide breakdown of major/material components in this line items.

CASH FLOWS FROM FINANCING ACTIVITIES	GUIDANCE
Net Increase/(Decrease) in Long Term Debt	Ensure that proposed Broadband Loan project draws match the network build-out schedule and Capital Investment Workbook tab. Also ensure that amounts listed here relate to those advances and/or repayments in the Debt and Equity Funding Subtab and additional cash requirement, if applicable.
Increase/(Decrease) in Capital Stock, Paid-in-Capital, Membership and Capital Certificates & Other Capital	Ensure that amounts listed here relate to those in the Debt and Equity Funding Subtab and additional cash requirement, if applicable.

Payment of Dividends, Patronage Capital Credits Retired, or any other Distribution)	Document the planned annual payments of patronage capital credits and planned dividends.
Ending Cash	Ending cash represents the applicant's cash balances at the end of the period and should agree with the Cash category of the Balance Sheet.

1.16.4 Additional Financial Assumption Considerations

Customer Premises Equipment (CPE): One of the eligible Broadband Loan project costs is for the acquisition of CPE (and associated installation costs), as long as the CPE is owned by the applicant throughout its economic life.

If you do not intend to retain ownership of CPE, you must **select one** of the following alternatives allowed under 7 CFR 1738.52(e) in order to secure Broadband Loan funding for CPE:

- Pledge Additional Collateral: Provide a complete description and supporting information, sufficient for RUS to determine the value and to prepare documentation to secure RUS"s collateral interest. This collateral cannot be assets purchased with the loan funds and it must have a value at least equal to the amount being used for the CPE and associated installation costs.

- Describe Revolving Fund: Provide a description of how the applicant will administer a revolving fund for the purchase of the CPE and the sale of CPE to the customer. The description should provide a quarterly estimate of advances used for purchases, sales/collections used for revolving fund reductions, and the resulting balance on a quarterly basis.

1.17 Refinancing Documentation **(if applicable).**

For Broadband Loans that include proceeds to refinance an outstanding telecommunications loan made under the Rural Electrification Act of 1936, provide satisfactory evidence for RUS to determine that the benefits realized from the refinancing will further enhance services at the Broadband Lending Speed in rural areas. The amount requested for refinancing cannot exceed 40 percent of the requested loan amount. The applicant should also include the details of the notes that are being proposed to be refinanced. See 7 CFR 1738.51(d) for more information on eligible refinancing conditions.

1.18 Investor Proposal **(if applicable).**
A sample of this proposal is available in the Appendix. The document must include, at a minimum:

- A letter from the investor indicating the investor's unconditional legal commitment, the timing for providing the investment, the amount of investment, and all terms and conditions associated with the investment (RUS may reject investments that do not prohibit redemption of the investment until such time as stated requirements and financial thresholds are achieved by the applicant).

- Bank or financial statements from the investor that demonstrate the investor's ability to meet

its commitment to the applicant. If this option is selected and supporting information is not included, the application will be rejected. Note that the financial statements must document that the funds are titled in the name of and owned by the investor

1.19 State or Local Government Bond **(if applicable).**

State and local governments may satisfy the equity requirement with a general obligation bond that is not senior to the Broadband Loan (in practice, this generally means that the bond is *pari passu* with the Broadband Loan). A sample of the information needed is in the Appendix.

The applicant must submit an opinion from its legal counsel, acceptable to RUS, that the applicant has the authority and capacity to issue a general obligation bond in an amount sufficient to meet the minimum equity requirement. With receipt of an acceptable opinion, RUS can proceed with its review of the application.

If RUS extends a loan offer to the applicant, the general obligation bond must be issued and the applicant must have the cash deposited in its bank account before the loan closing can occur. The Broadband Loan will not be subordinate to the general obligation bond.

Revenue bonds supported by the operations to be funded cannot be used to satisfy the equity requirement.

1.20 Fifty (50) Percent Reduction in Revenues Financial Forecast **(if applicable).**

In addition to the initial financial projections required to demonstrate financial feasibility, such applicants must complete adjusted financial projections using the reduced revenue projections in order to identify the amount of additional cash that will be required. For more information, review this section.

1.21 Assumptions to 50 Percent Reduction in Revenue Financial Forecast.

The 50 Percent Reduction in Revenues financial forecast must be fully supported with assumptions acceptable to the Agency. The applicant may present evidence in its loan application that projected revenues or a portion of projected revenues are based on binding commitments and request that more than 50 percent of the projected revenues be considered for the purpose of identifying the additional cash requirement.

1.22 Unaudited Historical Financial Statements, including Assumptions **(required for start-ups and companies without audited information).**

1.23 Tax Returns **(required for start-ups and companies without audited information).**

1.24 Competitor Strategic Plan.

In this narrative, you will present your comprehensive and well-researched strategy for successfully competing against existing service providers. The competitive analysis should demonstrate that you have detailed knowledge of your competitors; an understanding of your competitor's strategies, investments and capabilities; and a strategy for successfully competing against these competitors. Informal or casual knowledge about existing service providers is generally inadequate to develop an effective strategy for an applicant to successfully compete in a market.

Use the guidance below to develop your Strategic Plan.

1.24.1 Answer the following questions when you describe your strategic plan:

a. How do your service offerings compare with those of your competition?
b. How will you win new customers, including those of your competitors?
c. What incentives, marketing and pricing strategies will you use?
d. What strategies will you use to counteract any advantages or strategies used by the competition?

1.24.2 Describe your primary market:

a. Geographic area to be served should agree with the service areas detailed on the Service Area(s) Tab. Factors affecting market growth should be described including how they will impact your plans, and how you will mitigate risks and penetrate the current markets.
b. The current status, prospects, and trends influencing the industry in your target areas.
c. A description of targeted customers including the key factors that influence their service selection decisions. This should be substantiated from a market analysis, if required.
d. A description of your pricing strategy and pricing goals for the short- and long-term, including ramp-up and market share.
e. A description of your approach to advertisement and promotion of services, e.g., how you will reach the most customers and deter competitors. Include a description of the advertisement and promotions strategy, marketing plan, the cost to execute the marketing plan, and the messages you will provide to the target markets. It should compare the marketing approach to the current marketing programs competitors are pursuing or are likely to pursue.

1.24.3 If broadband service is proposed to be offered in an area where there are no households ("green field" area), the application must include information that justifies the subscriber penetration rates since no market information is available.

This information might include:

a. Subscriber penetration rates from comparable rural areas.
b. Census data on income levels compared to other rural areas.
c. Census data on age levels compared to other rural areas.
d. Census data on computer ownership compared to other rural areas.
e. Permits, plans, plats, or other documentation submitted to or approved by local authorities that supports your projections of population growth in the area to be served.
f. Subscriber penetration by satellite service providers.
g. Letters of support from residents and community leaders in the rural area.
h. Minutes of "town hall" meetings held in the rural area.
i. Any other information that supports your projections.

1.25 Substantially Underserved Trust Area (SUTA) Attachments.

If you are serving a community that has a SUTA designation and you are requesting SUTA consideration in relation to your application, then you must upload as attachments all of the information requested in 7 CFR 1700, Subpart D.

Please identify the discretionary authorities of 7 CFR 1700, Subpart D that you seek to have applied to its application. Note, however, that given the prohibition on funding operating expenses in the Broadband Program, requests for waiver of the equity or the additional cash requirements cannot be considered.

2. Certifications Subtab

On this subtab, the authorized member from your team can certify each document by opening the link, reviewing the content, and checking the electronic signature box. That person may also upload any additional certifications that are applicable to the application.

2.1 Certification Regarding Architectural Barriers.

2.2 Certification Regarding Debarment, Suspension, and other Responsibility Matters – Primary Covered Transactions.

2.3 Certification Regarding Flood Hazard Area Precautions.

2.4 Certification Regarding Lobbying for Contracts, Grants, Loans, and Cooperative Agreements.

2.5 Civil Rights Compliance Certification.

2.6 Uniform Relocation Assistance and Real Property Acquisition Policies Act of 1970 Certification.

2.7 Representation Regarding Felony Conviction and Tax Delinquent Status for Corporate Applicants – AD-3030.

2.8 Design Certification.

Download this certification from the Certifications Subtab under the Documents Tab. After signing the certificate, you must upload it on the Attachments Subtab. Submitting a signed Design Certification asserts that the System Design was prepared by qualified personnel on the applicant's staff or by consultants.

If prepared by the **applicant's staff**, then copies of the staff's qualifications must also be uploaded to the Attachments Subtab. To be considered qualified, staff must have at least three years of experience in designing the type of broadband system proposed in the application.

If prepared by a **consultant** that was not a registered engineer licensed in the state in which the facilities will be constructed, then a registered engineer that **is** licensed in the applicable state must certify that the proposed System Design will be capable of delivering service at the Broadband Lending Speed.

3. Licenses and Agreements Subtab

On this subtab, upload the documents that correspond with the Document Type. Select the appropriate status and enter any relevant comments. For all Existing/In Hand licenses and

agreements, attach the sections that indicate the terms, including capacity and cost. You must provide a status report for all licenses, agreements, approvals, and authorizations that may be required to construct the broadband network.

You may add as many rows as is necessary to depict the full range of licenses, agreements, approvals, and authorizations involved in your project. Please upload any additional licenses and agreements. Select the relevant Document Type. After the document has uploaded successfully, select the appropriate status and enter any comments.

Use the following as a guide for the status indicators available:

Status	Example
Not Required – RUS already has a copy on file	Select if the document is required for the project, but not required for submission because RUS already has it.
Not Required	Select if the project will not, at any point, require this license. For example, FCC Spectrum Licenses will never be required for a wireline provider.
Draft	Select if the agreement has been written, but has not been signed.
Existing/In-Hand - No Modifications Needed	Select if the agreement is completed, in-hand, and ready for action. For example, for most wireline incumbents with existing operations in a proposed funded service area, their Certificate of Public Convenience and Necessity will already be in hand.
Existing/In-Hand - Modifications Needed	Select if the existing agreement that will require modifications, such as backhaul agreements for an incumbent that need to be increased in capacity.
Applied, but Pending	Select if you have applied for the license, and are now awaiting confirmation and/or approval.
Contingent Upon Award	Select if the agreement may exist and be finalized, but will be valid only if you receive an award.
Not Available Until Project Is Funded	Select if the agreement cannot be completed until you either have confirmation of winning the government award or have received the first disbursement. <u>In the comments box,</u> add contextual information that is relevant to the ownership and availability of the license or agreement. For example, indicate whether an asset is owned or will be owned by a parent company or organization, if (in the case of spectrum) it is being leased to the applicant, and on what basis (exclusive, non-exclusive, time-limited) this lease is being made.

3.1 <u>Certificate of Public Convenience and Necessity</u> (CPCN).

CPCN is an authorization issued by the State Public Service Commission (PSC) for the delivery and/or provision of a public service to a designated area or parcel of land. A CPCN is generally needed to permit building facilities in public rights of way and for certain types of commerce. CPCN rules and regulations vary by State.

3.2 Franchise Agreements.

An agreement that grants a network operator the right to construct in rights of way governed by the local franchise, usually the local municipality, and market for sale video services to paying subscribers in that local district.

3.3 Internet Service Agreement.

An agreement between an Internet Service Provider ("ISP") and a retail reseller of Internet services (usually the applicant). This generally includes details regarding facilitating, provisioning, transporting, and maintaining a fixed or variable amount of payload traffic (a.k.a., bandwidth) from one or more locations to an ISP's portal.

3.4 Internet Service Connection Backhaul Agreement.

The agreement governing the physical link connecting an applicant's network to the ISPs facilities. In some cases, this agreement will be part of the Internet Service Agreement, and in other cases, it will be separate.

3.5 Pole Attachment Agreement.

An arrangement between the owner of the pole, usually a power or phone company, and an operator who wants to lease the right to attach fiber strand (for example) so that they may construct infrastructure more cost effectively than performing underground construction.

3.6 Special Permits (federal, highway, bridge, etc.).

Certain protected Federal Lands like National Parks, Historic Districts, or other protected or Federal government owned land require the following of a particular protocol in order to obtain permission to construct fiber optic infrastructure. Railroad Crossings or Bridge Crossings typically need to be coordinated with the State Department of Transportation.

3.7 Spectrum Agreements.

Spectrum agreements must show both capacity and cost.

3.8 Tower Attachment Agreements.

Agreements governing the terms under which an applicant can attach and operate its equipment.

3.9 Tower-Site/Property Agreements.

Agreements governing the terms of use of any tower sites where an applicant intends to use or build its own facilities.

3.10 Video Carriage Agreements.

A contract that authorizes a network operator to [re]transmit content. These can be obtained from content aggregators who offer entire channel lineups, or from individual broadcasters, production companies, etc.

3.11 Wireless Spectrum Licenses (for backhaul transport).

3.12 Wireless Spectrum Licenses (end-user access).

The legal right to transmit on a specific frequency to CPE devices for the transport of communication services.

3.13 Affiliate Agreement.

Agreement containing the terms and conditions of services offered by an affiliate.

L. Summary/Submit Tab

This tab lists each part of the application and identifies whether you have completed the item. The system checks for consistent data across certain tabs and fields. Therefore, if you see any red X's, please complete that item or correct the data entered there. You can expand the Construction, Financials, and Documents Tabs to view information on the subtabs. Once all red **X**'s have been replaced with green **checkmarks (✓)**, you are ready to do the following:

1. Contact your General Field Representative. Your GFR, with whom you have been in contact throughout the application experience, will now conduct an additional completeness review. RD Apply can only identify that an applicant has entered data in a required field or uploaded a document under the required heading. The system cannot review the data or document for quality of completeness. Additionally, applicants may be required to submit additional information based on their circumstances that RD Apply may not request. Your GFR will help ensure that you submit the most complete application possible.

2. Click Submit! Once RD Apply has recognized that all required headings have been addressed, the Submit button will appear.

****NOTES ON SECTION III****

Remember to SAVE your work in RD Apply. The Save button is at the bottom of each Tab and Subtab.

Market surveys will only be accepted if they were conducted within six months preceding the date of application submission to RUS.

All projected market penetration rates must be supported with evidence whether or not they exceed 20 percent for any one offering in a given area.

RD Apply only confirms that the applicant has addressed the required components. The system **does not** check for quality or applicant-based special requirements.

Applicants should consult with their assigned General Field Representative.

If audited statements are not available for the three most recent fiscal years, the applicant must submit unaudited financial statements including explanations **and tax returns for those years**.

You may only modify the "Year of Application" twice before the selected year is locked in the system.

Section IV-- Common Errors

Below are common errors that RUS reviewers encounter with loan applications. Please review the list carefully and make sure that your loan application package is error-free.

The following documents are often **incomplete** or **missing**:

A. Adjusted Financial Forecast Depicting 50 Percent Reduction in Revenues ("Revenue Sensitivity Analysis") with Assumptions ("Assumptions to Sensitivity Analysis")

What is it? An **additional** forecast with corresponding assumptions, in which the revenues are reduced by 50 percent for each year of the pro forma financial forecast. If any year in the forecast indicates a negative cash balance, the applicant must also submit documentation that satisfies the **additional cash requirement**, which is described in the following section.

Who submits? Applicants that are start-up companies or have **negative cash flow from operations** in the two fiscal years prior to the submission date of the application must submit this documentation.

Where can I find more information? Review 7 CFR 1738.208(a)(2).

B. Ways to Satisfy the Additional Cash Requirement

What is it? An applicant must provide evidence of additional cash infusions if the Agency's financial analysis identifies a negative end of year cash balance at any point in the adjusted or unadjusted financial forecast periods. An applicant can satisfy the additional cash requirement through one of the following ways:

- **Cash Infusion.** Applicant and its investors can submit financial documentation that they will be able to deposit enough cash to cover the projected deficits for Future Years 1-2 at loan closing and provide legal documentation that commits them to providing enough cash to sustain a positive cash position on a quarterly basis for Future Years 3-5.
- **Other Debt.** Applicant can submit documentation that it is incurring other debt to cover the project cash deficits. This debt must take a subordinate lien position to the Agency debt and must be at terms acceptable to the Agency.
- **Letter of Credit.** Applicant can submit documentation issued by a bank that firmly commits the bank to issue an irrevocable Letter of Credit (LOC) if the applicant is awarded a Farm Bill loan. If the loan is awarded, the applicant must immediately submit the bank-issued LOC, which must state the dollar amount and the terms and conditions, and identify both the applicant and the Agency as payees. The LOC must be in place prior to loan closing and remain in effect throughout the forecast period. All payment conditions and language must be acceptable to the Agency.

Who submits? Applicants whose statements of cash flows show negative cash flow from **Operations** in the two fiscal years prior to application submission and/or any applicants, including start-up companies, whose **adjusted or unadjusted** 5-year financial forecasts indicate an inadequate cash balance at the end of any future year must submit documentation according to one of the ways described above.

Where can I find more information? Review 7 CFR 1738.208.

C. Investor Proposal with Bank/Financial Statements or a State/Government Bond with a Legal Opinion

What is it? Legal documents that demonstrate that the applicant will be able to satisfy the equity requirement prior to loan closing.

Who submits? Applicants that do not demonstrate an equity position that is at least 10 percent of the requested loan amount at the time of loan submission must submit these additional documents. If an applicant submits more than one application, then the equity requirement will be calculated based on the **sum** of the requested loan amounts, as if all applications will be successful.

Where can I find more information? Review 7 CFR 1738.207 and this section of this Guide.

D. Current Market Survey

What is it? Survey(s) that the applicant conducts as evidence of support for their projected penetration rates. These surveys must be conducted **within the 6 months** preceding the submission date.

Who submits? Applicants that are projecting a penetration rate of 20 percent or more for any service offering in any service area must submit this documentation.

Where can I find more information? Review 7 CFR 1738.209 and this section of this Guide.

E. Financial Assumptions

What is it? The financial assumptions, which are required for the 5-year financial forecast and for the adjusted forecast in which 50 percent of revenues are reduced (if applicable), must adequately address **every category in the pro forma financial statements.** This narrative(s) should include a discussion of any historical trends or anomalies and their impact on the assumptions for the 5-year forecast(s). The applicant should not only include any calculations or percentage changes in the assumptions, but also discuss the reasons for choosing any multipliers or percentage increases/decreases for the forecast.

Who submits? ALL applicants must submit this documentation. Only applicants that are also submitting an adjusted financial forecast must submit adjusted financial assumptions.

Where can I find more information? Review 7 CFR 1738.211(b)(2)(i) and this section of this Guide.

F. Three Years of Audited Historical Financial Data OR Three Years of Unaudited Financial Data with Tax Returns

What is it? The audited financial statements for the three preceding fiscal years must be accompanied by an auditor's notes confirming that the statements have been audited and are **not compilations or reviews**.

If the applicant cannot submit audited statements, the applicant must submit its unaudited financial statements and **tax returns** for those years. Start-up companies must, at a minimum, provide an opening balance sheet dated within 30 days of the final submission of all application material.

Who submits? ALL applicants must submit this documentation. Please note that **start-up companies** must, at a minimum, provide an opening balance sheet dated within 30 days of the final submission of all application material, since they will not have three years of historical financial data available.

Where can I find more information? Review 7 CFR 1738.211(a)(1) and this section of this Guide.

G. Supporting Documentation of Existing Debt

What is it? If applicants indicate that they have existing debt, RUS requires submission of the legal documents associated with the existing debt. On the Attachments Subtab, in the Additional Attachments section, click on the Upload button. For Category, select "Financial." For Document Type, select "Copies of Mortgages, Notes and Other Security Agreements for Existing Non-RUS Debt" or "Outstanding Federal Debt." In the Description text box, enter a brief summary on the file content (e.g., "Company A Promissory Note").

Who submits? ALL applicants with existing RUS or non-RUS debt must submit this documentation.

Where can I find more information? See this section of this Guide.

H. Funded and Unfunded Service Areas.

What is it? Applicant must include service areas and corresponding capital investment workbooks for both funded and unfunded service areas in which network changes are being made.

Who submits? ALL applicants must submit this documentation.

Where can I find more information? See this section of this Guide.

Section V – Frequently Asked Questions

A. What is Broadband Service?

Broadband service is any technology identified by the Administrator as having the capacity to transmit data at a specified rate to enable a subscriber to originate and receive high-quality voice, data, graphics, and video. From time to time, the Agency will publish a Notice in the Federal Register that updates the transmission speed that qualifies as broadband service. For more information, see this section of this Guide or the most recent Notice for the Broadband Program.

B. What are the terms of these loans?

Loans are to be repaid with interest within a period that equals the expected economic life of the facilities to be financed, as calculated by the Broadband Program. The expected composite economic life is the depreciated life plus three years.

Principal payments on the loans are scheduled to begin two years from the date of the first advance of loan funds. Borrowers may request an earlier their principal payment start date. For more information, review 7 CFR 1738.153 and this section of this Guide

C. Does Broadband Program provide loan funds for acquisitions?

Yes. RUS will finance the acquisition by a borrower of another system, lines, or facilities only when the acquisition is necessary and incidental to furnishing or improving broadband service. For more information, review 7 CFR 1738.51 and this section of this Guide

D. What is the interest rate on these loans?

The RUS Cost-of-Money Loans will bear interest at a rate equal to the current cost of money to the Federal Government for loans of a similar maturity. For more information, review 7 CFR 1738.152 and this section of this Guide

E. Do we have to use all of the loan funds?

No. Any funds not needed may be rescinded and a rescission can be requested at any time by the borrower.

F. Does the Broadband Program offer lines of credit?

No.

G. Does RUS wire 100 percent of the loan amount to the Borrower at loan closing?

No. Loan funds are requested as needed based on invoices and/or executed standard RUS contract forms as discussed in Bulletin 1738-2.

H. Under what circumstances would I need to satisfy the additional cash requirement?

An applicant would need to attach documentation that satisfies the additional cash requirement **by loan closing** if either of the following circumstances applies:

1. The applicant's equity position is equal to less than 10 percent of the requested loan amount. If the applicant has insufficient equity, only an attached Investor Proposal and Investor bank or financial statements or a general obligation bond with a legal opinion will satisfy the cash requirement. For more on the Equity Requirement, see 7 CFR 1738.207 or this section of the Guide.

2. The applicant is unable to demonstrate a positive cash position for all five years indicated on the financial forecast. For more on the Additional Cash Requirement, see 7 CFR 1738.208.

    - If the statement of cash flows shows negative cash flow from Operations in either of the two fiscal years prior to application submission, then the applicant is required to submit an adjusted financial forecast with new assumptions, depicting a 50 percent reduction in revenues. If any year in either the adjusted or unadjusted financial forecast shows a negative ending cash balance, then the applicant must attach an irrevocable and unconditional Letter of Credit from an acceptable financial institution.

    - If a company is a start-up, then the applicant must also submit an adjusted financial forecast with new assumptions, depicting a 50 percent reduction in revenues. As in the scenario above, if any year in either the adjusted or unadjusted financial forecast shows a negative ending cash balance, then the applicant must attach an irrevocable and unconditional Letter of Credit from an acceptable financial institution.

Appendix A - Templates and Samples

A. Sample Legal Opinion

[Attorney Letterhead]

Date

Administrator
Rural Utilities Service
United States Department of Agriculture
Stop 1500
Washington, D.C. 20250-1500 Subject: (Company Name)

Ladies and Gentlemen:

We are counsel to_____(the "Company") in connection with the Company's application (Application) for a loan or loan guarantee from the Rural Utilities Service (RUS) to provide telephone service. We have examined or caused to be examined by competent and trustworthy persons such corporate records and files and such other records, indexes, and files as we have deemed necessary to permit us to render the opinions expressed herein.

We are of the opinion that:

1. The Company is a (corporation, cooperative, limited liability company, etc.) duly formed, validly existing and in good standing under the laws of the State of_____.

2. The Company operates in the State(s) of_____and is duly licensed and qualified and in good standing as a foreign_____, authorized to do business and own property in such State(s).

3. The Company has full legal right, power and authority to own its property and carry on its business as now conducted.

4. The execution, delivery and performance by the Company of the Application and the consummation of the transactions contemplated thereby are within the powers of the Company.

5. The Application has been duly executed by the Company.

6. The Company owns the real property described on Schedule A attached hereto (in both a paper format and an electronic copy on appropriate media) and such property is in the counties of_____ _____in the State(s) of_____.

7. The Company has the power to grant a security interest in the property described in paragraph 6 to the RUS as collateral for the loan described in the Application.

8. Schedule A contains complete and accurate descriptions of all the real property owned or leased by the Company, excluding easements and rights-of-way, which are sufficient, in form and substance, for inclusion in the granting clause of a mortgage creating a lien on such property.

9. The Company owns telecommunications facilities, including central office facilities, lines, and other outside plant, in the counties of _____in the State(s) of_____.

10. For purposes of Article 9 of the Uniform Commercial Code in the State of____, the Company is a "transmitting utility" (or is not a "transmitting utility.")

11. The execution, delivery and performance by the Company of the loan documents will not require the consent, permission or authorization of any governmental authority.

-OR-

11. The execution, delivery and performance by the Company of the loan documents will require the consent, permission or authorization of_____.

We have also verified the following information:

1. The Company's organizational number is_____.

2. The exact true and correct legal name of the Company, as stated in its organization documents, is _____.

3. The Company's corporate debt limit is_____.

4. The Company's taxpayer identification number is_____.

5. The Company's D-U-N-S number is_____.

6. The pending claims or litigation against the Company are described in the attached Schedule B.

-OR-

6. There are no pending claims or litigation against the Company.

7. The Company has no subsidiaries.

-OR-

7. The Company's subsidiaries are listed on the attached Schedule C.

8. The titles of the officials of the Company with the proper authority to execute all loan documents on behalf of the Company, and attest to the execution where required, are _____.

Sincerely,

B. Sample Organizational Chart—Applicant Operations

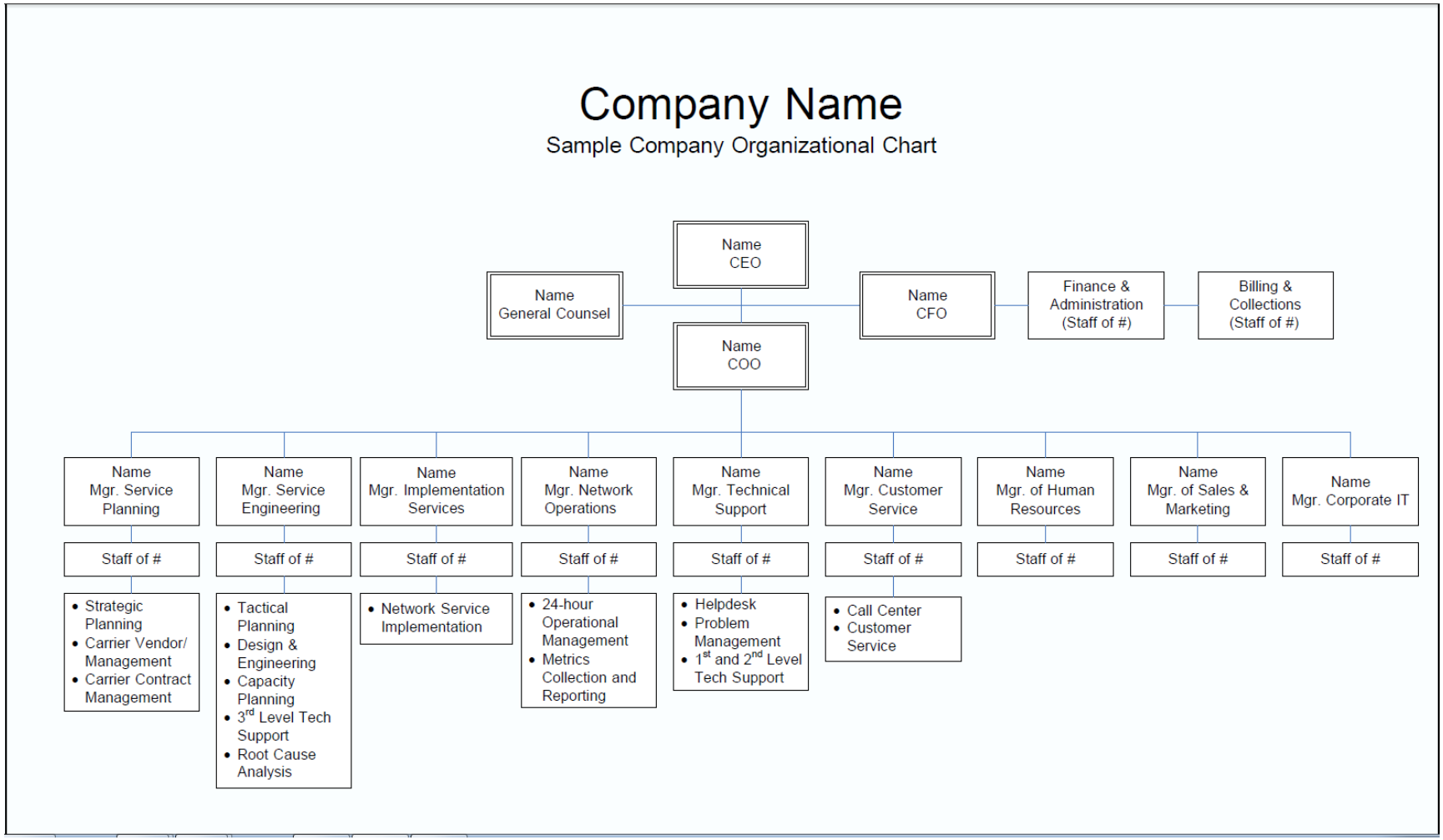

C. Sample Organizational Chart—Parent/Subsidiary Operations

Sample Parent and Subsidiaries Chart

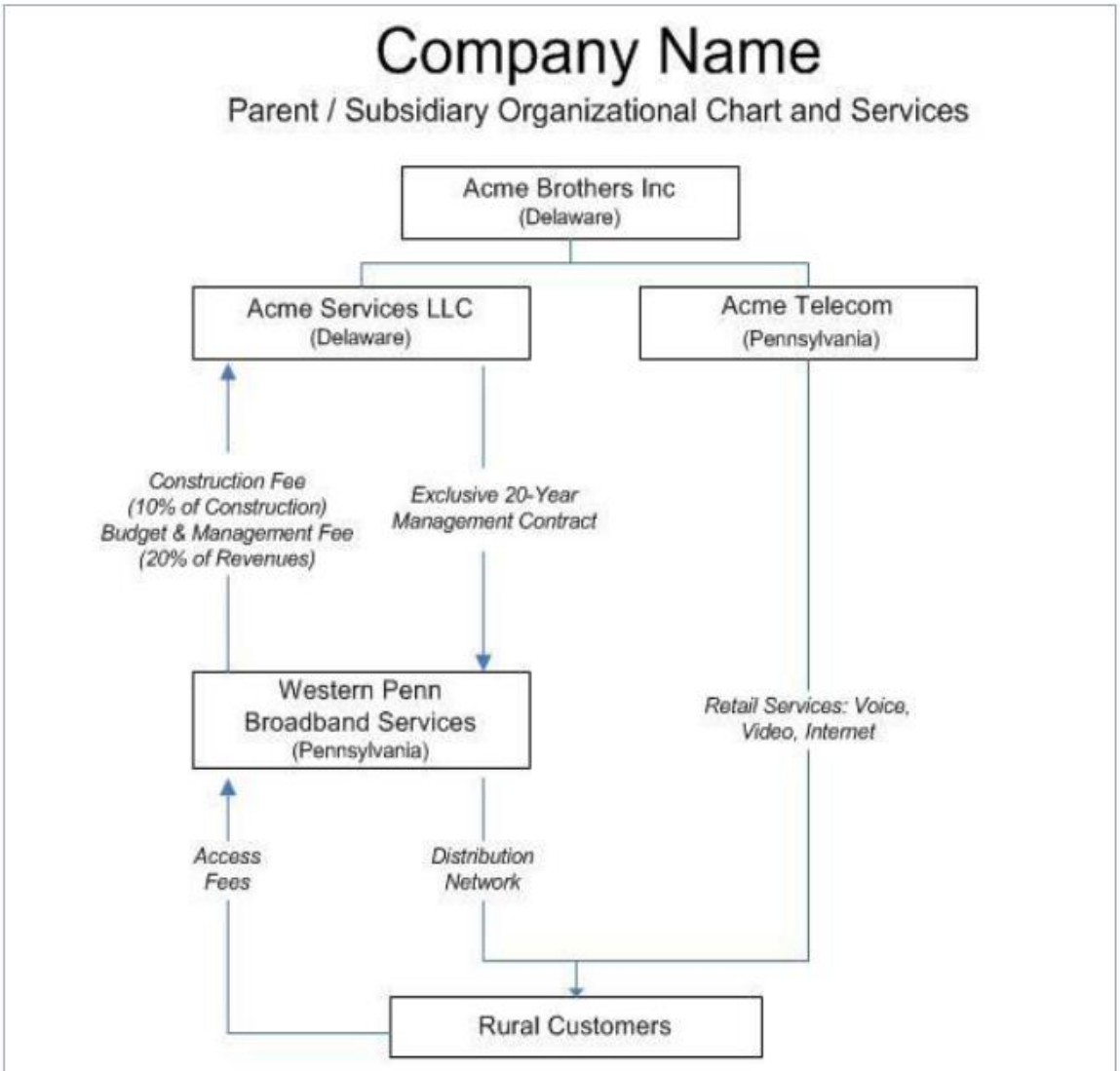

Acme Services, LLC: A subsidiary of Acme Brothers, Inc. Provides management services, including backend customer service and billing. Operates the network operating center.

Western Penn Broadband Services: The local entity which would own and operate the local distribution infrastructure (not RD-funded) for its service territory. The distribution network will be open-access.

Acme Telecom: A subsidiary of Acme Brothers, Inc. Provides retail internet, voice, and video services over the distribution network. Acme Telecom will not be an RD borrower.

D. Equity – Investor Proposal

If the Balance Sheet indicates that the applicant does NOT have a minimum equity position equal to 10 percent of the requested loan amount, the applicant must submit an investor proposal indicating how the equity requirement will be met before loan closing.

Name of Investor: _____

Point of Contact: _____
Address: _____
Phone: _____
Email: _____

Amount of Commitment: _____

Date when funds are available: _____

Attach:

a. ☐ Investor letter of commitment

b. ☐ Investor's bank or financial statement

E. Equity – State/Local Government Bond

A. For State and local government applicants intending to satisfy the equity requirement with a general obligation bond, submit an opinion from its legal counsel that the applicant has the authority to issue a general obligation bond in an amount sufficient to meet the minimum equity requirement. If the equity requirement is satisfied with a general obligation bond, the general obligation bond must be *pari passu* with the Broadband Loan.

Amount of General Obligation Bond: _____

Date when funds are available: _____

Attach:

☐ Legal counsel opinion

F. Network Diagram Examples

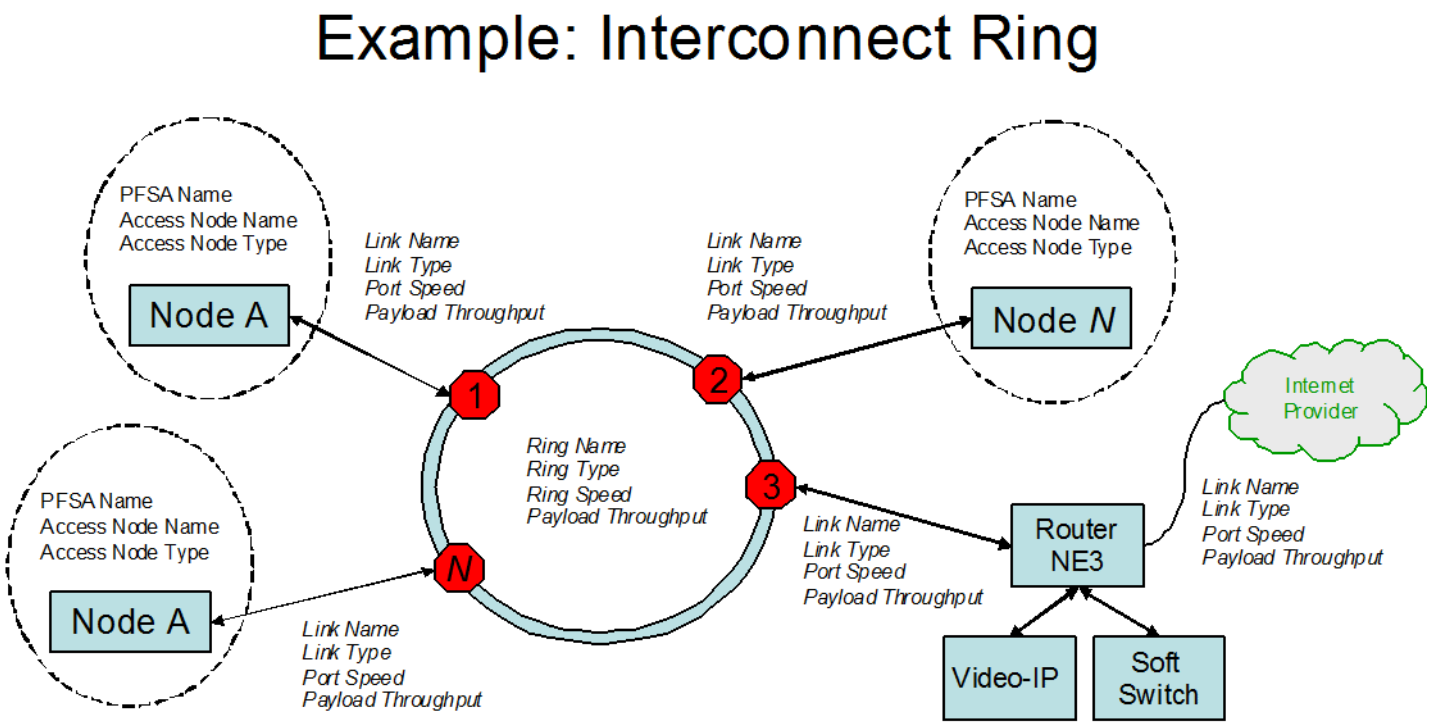

Node Name	Network Element	Service PFSA	Port Speed (Mbps)	Port Payload (Mbps)	Network Element Location (Lat / Long)	Existing or New	Estimated Data / Video / Voice Payloads (Mbps)	Number of PFSA Premises Served

Example: RFoG Access Diagram – Traffic Loading

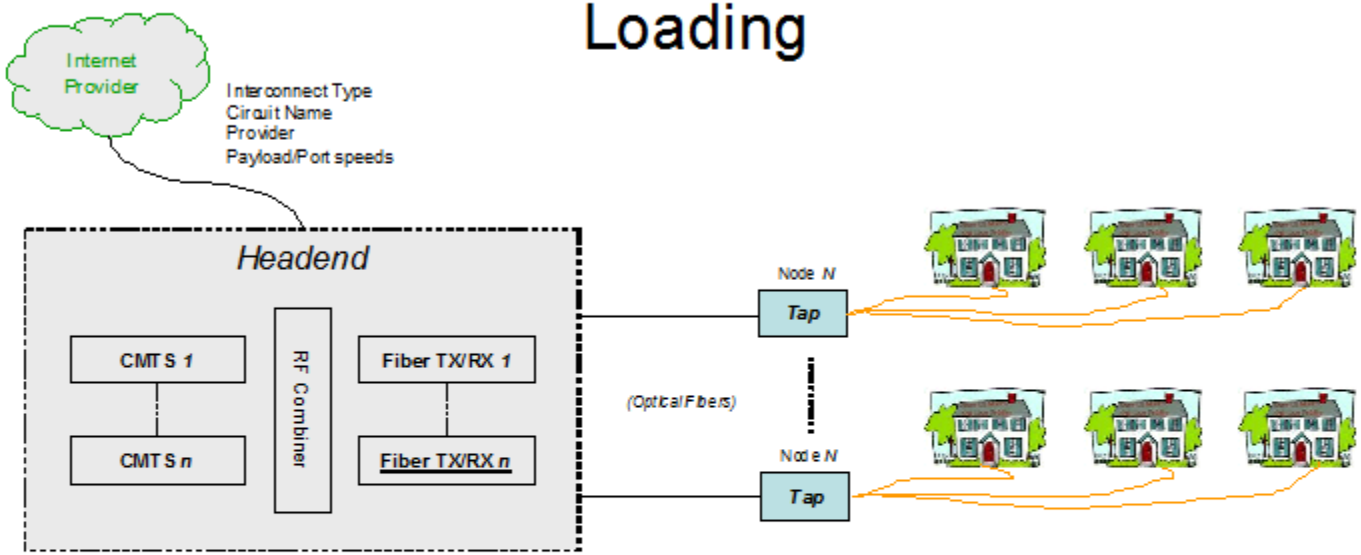

CMTS Name	DOCSIS Technology	Downstream Modulation	Upstream Modulation	Number of Downstream Ports	Number of Upstream ports	Number of Nodes per Downstream Carrier	Homes per Node

Example: RFoG Access Diagram – Outside Plant

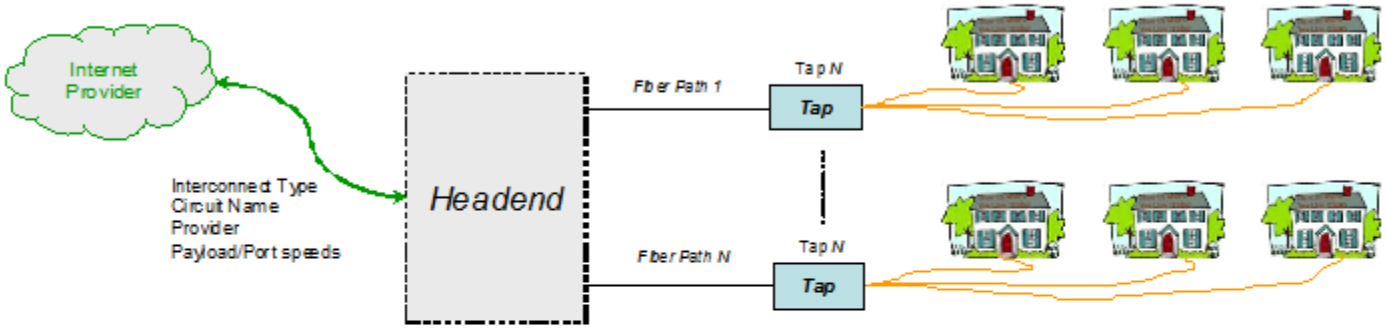

Path Name	Path Length (km)	Node Name	Node Location (Lat/Long)	Average Fiber Drop Length (ft)	Homes per Tap

Example: HFC Access Diagram – Traffic Loading

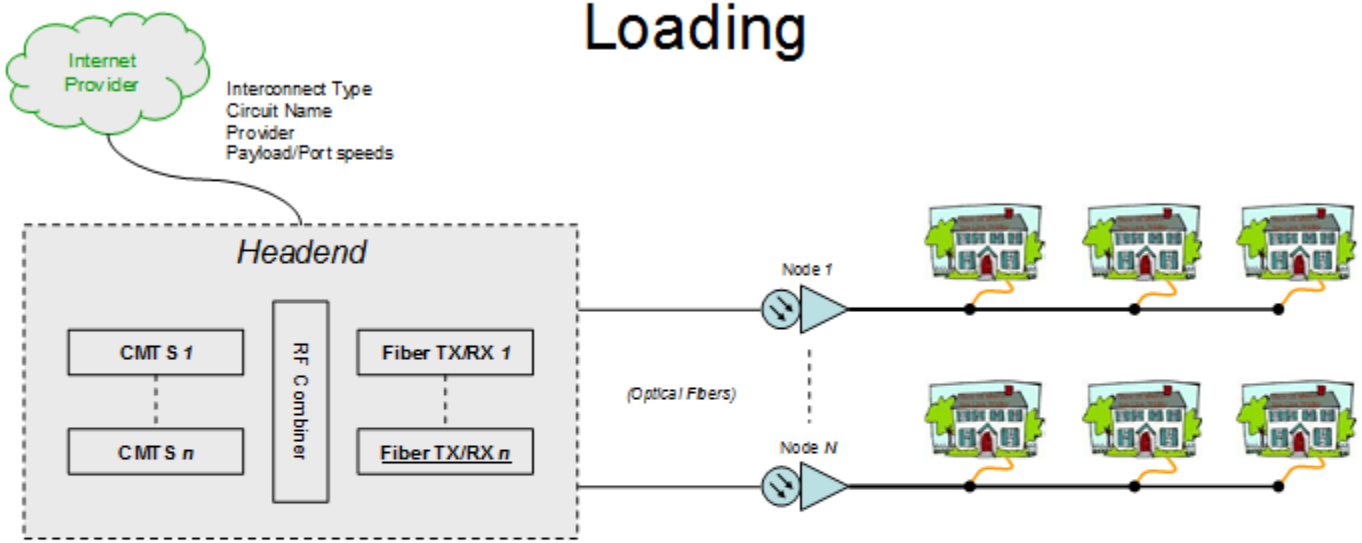

CMTS Name	DOCSIS Technology	Downstream Modulation	Upstream Modulation	Number of Downstream Ports	Number of Upstream ports	Number of Nodes per Downstream Carrier	Homes per Node

Example: HFC Access Diagram – Outside Plant

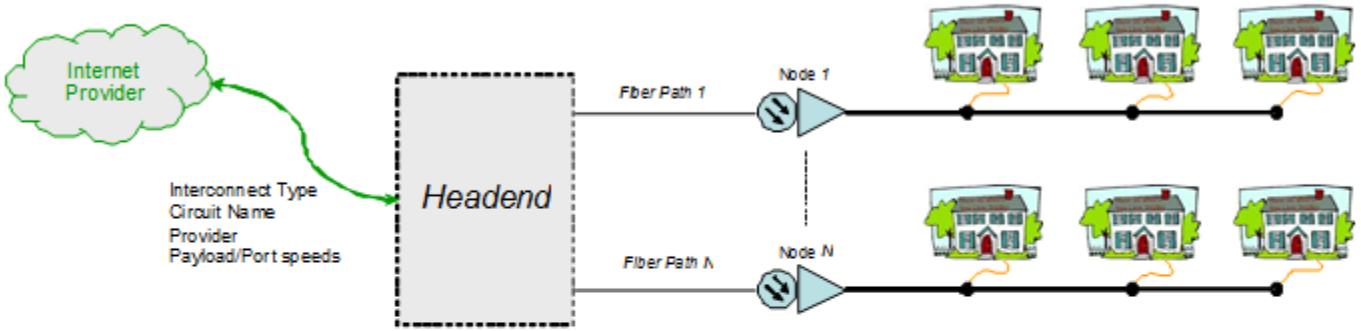

Path Name	Path Length (km)	Node Name	Node Location (Lat/Long)	Coax Cable Distribution Plant miles (this Node)	Average Drop Length (ft)	Homes per Node

Example: Active Ethernet or Fiber Point-to-Point Access Architecture

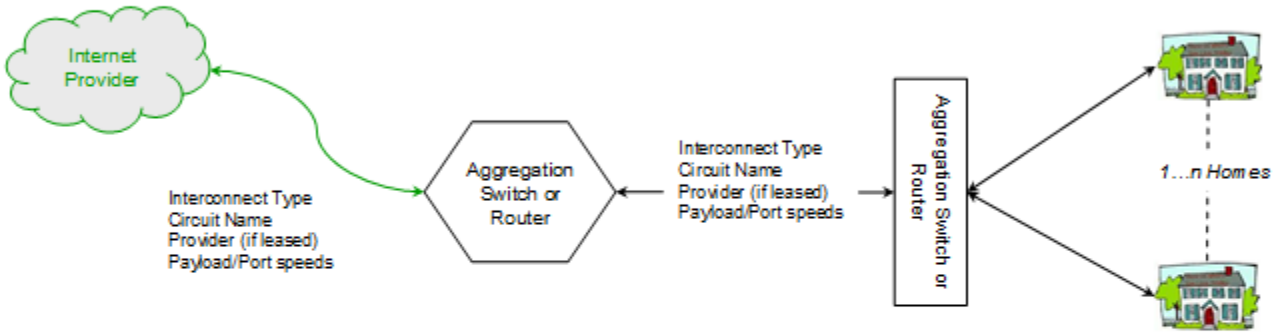

Local Ethernet Aggregation Switch Name	Local Agg Switch location (Lat/Long)	Number of Ports	Port Speed (Mbps)	Shortest Path (Kft)	Longest Path (Kft)	Backhaul Type	Backhaul Speed (Mbps)	Backhaul Link Distance (Kft)

Example: xDSL Access Architecture

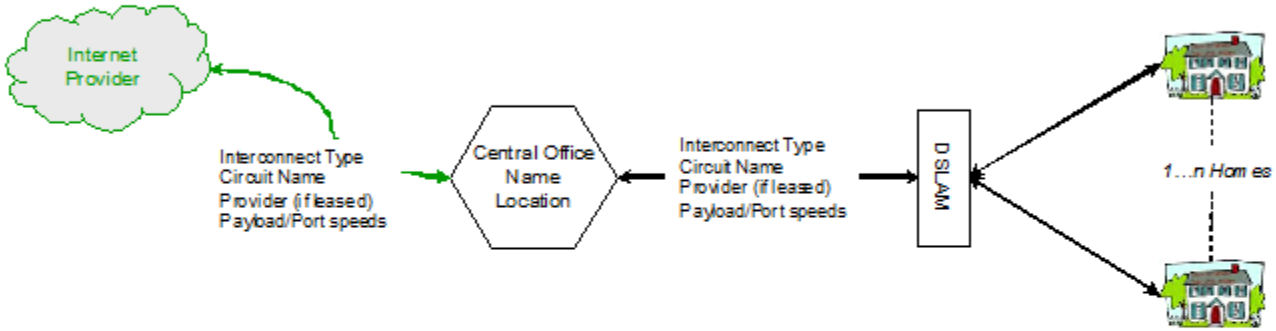

DSLAM Name	DSLAM location (Lat/Long)	DSL Format	Number of DSL Ports	Copper Gauge (AWG)	Shortest Loop (Kft)	Longest Loop (Kft)	Backhaul Type	Backhaul Speed (Mbps)	Backhaul Link Distance (Kft)

Example: Wireless Access Diagram

(Showing Microwave Backhaul and Fiber Backhaul)

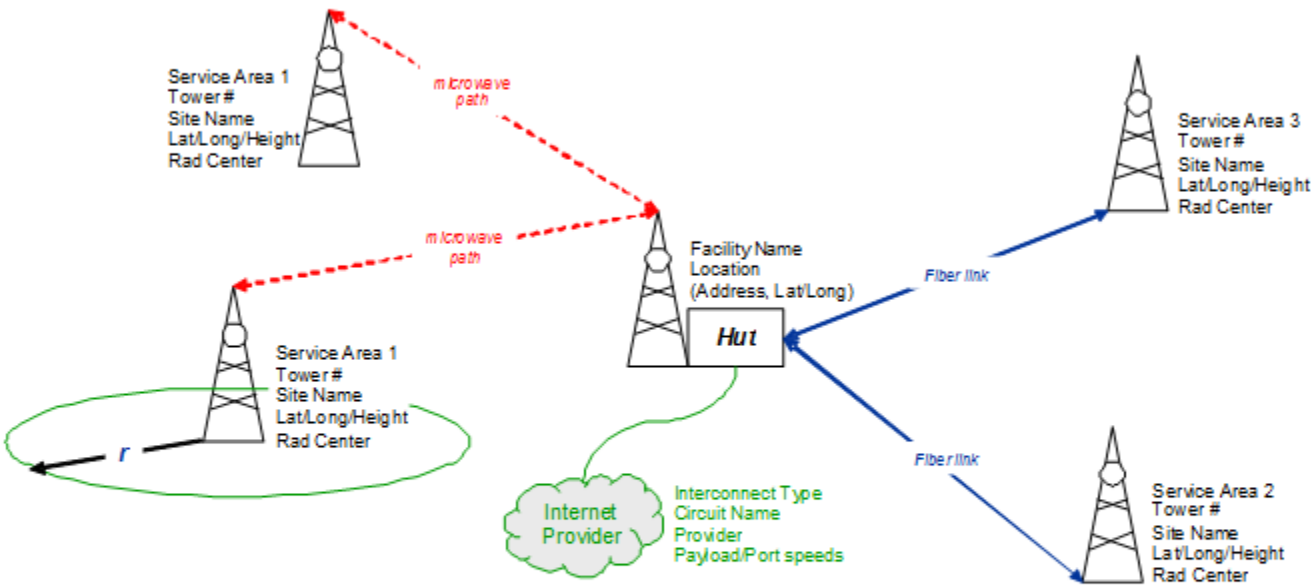

Site Name	Last Mile Coverage Radius (mi)	Number of Last Mile Sectors	Last Mile Frequency (MHz)	Last Mile ACM?	Last mile Bandwidth (MHz)	Backhaul-Leased (provider) or Owned	Backhaul Type	Backhaul Payload (Mbps)	Backhaul Link Distance	Backhaul Frequency (MHz)	Backhaul Bandwidth (MHz)

Example: Wireless Access Diagram

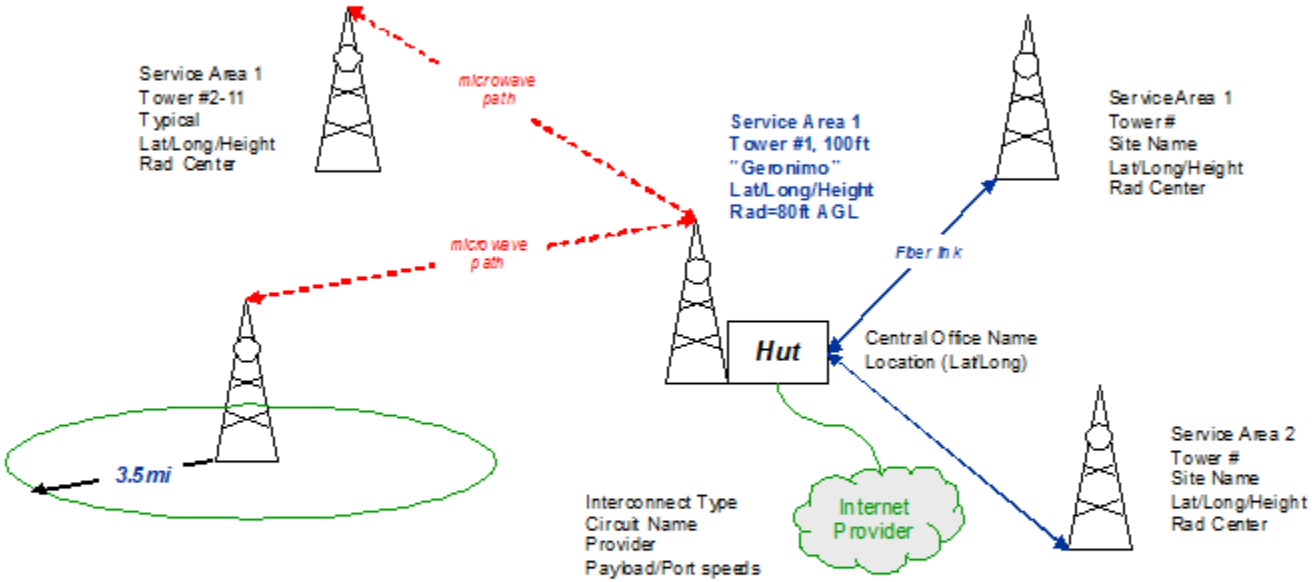

Site Name	Last Mile Coverage Radius (mi)	Number of Last Mile Sectors	Last Mile Frequency (MHz)	Last Mile ACM?	Last mile Bandwidth (MHz)	Backhaul - Leased (provider) or Owned	Backhaul Type	Backhaul Payload (Mbps)	Backhaul Link Distance	Backhaul Frequency (MHz)	Backhaul Bandwidth (MHz)
10X Typical	3.5mi	3	2300MHz	No	5MHz	Leased	Fiber (existing)	20Mbps	30mi	n/a	n/a
"Geronimo"	5.5mi	3	3650MHz	Yes	10MHz	Owned	Microwave	27Mbps	15mi	5800MHz	20MHz