UNITED STATES DEPARTMENT OF AGRICULTURE
Rural Development Utilities Programs
BULLETIN 1724E-216

SUBJECT: Guide Specification for Standard Class Prestressed Concrete Transmission Poles

TO: All Electric Borrowers

EFFECTIVE DATE: Date of Approval

OFFICE OF PRIMARY INTEREST: Engineering Standards Branch; Office of Policy, Outreach, and Standards

FILING INSTRUCTIONS: This bulletin replaces RUS Bulletin 1724E-216, "Guide Specification for Standard Class Spun, Prestressed Concrete Transmission Poles" issued November, 2009.

AVAILABILITY: This bulletin can be accessed via the Internet at:

http://www.rd.usda.gov/publications/regulations-guidelines/bulletins/electric

PURPOSE: This bulletin provides a basis for procuring standard class prestressed concrete poles.

CONTRIBUTORS: Current and former members of the Transmission Subcommittee of the Transmission and Distribution (T&D) Engineering Committee of the National Rural Electric Cooperative Association (NRECA).

Current members:
Ballard, Dominic, **East Kentucky Power Coop.**, Winchester, KY
Beadle, Bob, **North Carolina EMC**, Raleigh, NC
Beckett, Thomas, **Enercon**, Kennesaw, GA
Fan, Quan He, **Georgia Transmission Corporation**, Tucker, GA
Johnson, Wilson, **USDA, Rural Development Utilities Program**, Washington, DC
Lukkarila, Charles, **Great River Energy**, Maple Grove, MN
McAndrew, Jeremy, **South Mississippi Electric Power Assoc.**, Hattiesburg, MS
Metro, Patti, **National Rural Electric Cooperative Association**, Arlington, VA
Nicholson, Norris, **USDA, Rural Development Utilities Program**, Washington, DC
Nordin, Bryan, **Tri-State Generation & Transmission Association, Inc.**, Denver, CO
Ruggeri, Erik, **Power Engineers**, Hailey, ID
Shambrock, Aaron, **South Central Power Company**, Lancaster, OH
Twitty, John, **PowerSouth Energy Cooperative**, Andalusia, AL

Christopher A. McLean
Assistant Administrator,
Electric Program

7/27/16
Date

BLANK PAGE

TABLE OF CONTENTS

Page

INSTRUCTIONS WHEN USING THE GUIDE SPECIFICATION FOR STANDARD CLASS PRESTRESSED CONCRETE TRANSMISSION POLES.....v-viii

TECHNICAL SPECIFICATION 1-32
1. Scope……..... 1
2. Definitions..... 1
3. Codes and Standards 4
4. General Requirements..... 6
5. Inspection and Testing 17
6. Shipping and Delivery 20
7. Drawings and Information to be Supplied by the Manufacturer... 21
8. Approvals, Acceptance, and Ownership 22
9. List of Attachments to this specification 23
   Attachment A – Structure Dimensions and Pole Framing Drawings 25
   Attachment B - Application Requirements 27
   Attachment C – Standard Class Concrete Pole Bid Summary 29

APPENDIX A - COMMENTARY
APPENDIX B - EXAMPLE OF DRAWINGS
APPENDIX C - DESIGN EXAMPLES
APPENDIX D - SELECTED SI-METRIC EQUIVALENTS

ABBREVIATIONS

ACI	American Concrete Institute
ANSI	American National Standards Institute
ASCE	American Society of Civil Engineers
ASTM	American Society for Testing and Materials
AWS	American Welding Society
Eq.F	Equivalency Factor
FOB	Freight on Board
IFI	Industrial Fasteners Institute
HSS	High Strength Steel
kip	1,000 pounds
ksi	kips (1000 lb.) per square inch
kV	kilovolt
LF	Load Factor
mph	miles per hour
NESC	National Electrical Safety Code
OHGW	Overhead Ground Wire
PCI	Prestressed Concrete Institute
Psf	Pounds per square foot
psi	pounds per square inch
PVC	Polyvinyl chloride

DEFINITIONS

Borrower - An entity which borrows or seeks to borrow money from, or arranges financing with the assistance of the Agency through guarantees, lien accommodations or lien subordinations.

Rural Development Utilities Programs Forms – All forms and bulletins referred to in this bulletin are Rural Development Utilities Programs forms and bulletins, unless otherwise noted.

Form 198 - Equipment Contract

Rural Development Electric Program – An Agency within Rural Development, formerly Rural Utilities Service (RUS).

INDEX:

MATERIAL AND EQUIPMENT: Guide Specification for Standard Class Prestressed Concrete Poles
POLES: Concrete
SPECIFICATIONS AND STANDARDS: Guide Specification for Standard Class Prestressed Concrete Poles
TRANSMISSION FACILITIES: Poles (Concrete)

INSTRUCTIONS WHEN USING THE GUIDE SPECIFICATIONS FOR STANDARD CLASS PRESTRESSED CONCRETE POLES

1 PURPOSE

The intent of this guide specification is to provide Rural Development Electric Program borrowers a basis for procuring direct embedded standard class prestressed concrete poles. Use of this specification should help eliminate ambiguities that might arise in the evaluation process of competitively bid standard class concrete poles procurements.

Terminology used in this specification has been simplified in order to provide consistency. Referring to the owner can also mean the owner's representative or engineer.

Borrowers or their engineering representatives will need to complete and add to this specification as appropriate. Modifications to this specification may be necessary to consider special applications or preferences of the owner.

2 SCOPE

This suggested purchase specification covers the technical aspects of design, materials, manufacturing, inspection, testing, and delivery of direct embedded standard class prestressed concrete poles. It is recommended that this specification be limited to poles which are not guyed, not subjected to unbalanced lateral loads, or do not have deflection limitations or other special limitations. For concrete pole applications which consider these items, it is recommended that the owner use Guide Specification for Prestressed Concrete Pole and Concrete Pole Structures, Bulletin 1724E-206.

This guide specification does not include contract (front-end) documents or specifications for construction. The user of this specification should add these documents, including general conditions and any supplemental instructions to the bidders. This specification may be expanded to include H-frame structures.

3 INITIAL DESIGN CONSIDERATIONS

There are several engineering decisions required of the user of this specification to determine which standard class concrete poles to specify. Some examples include, but are not limited to:

- Amount of foundation rotation and deflection to consider for incorporating P-delta moments;
- Location of point of fixity;
- Embedment depths;
- Load cases to be considered in addition to those required by the National Electrical Safety Code (NESC); and
- Deflection limitations.

Prior to the selection of a standard class pole, the user should perform the engineering required for these types of issues or employ an engineering consultant to do so. See Appendix A of this bulletin for a discussion of some of these items.

4 INFORMATION TO BE COMPLETED BY THE OWNER

Users of these specifications should detach the instructions and the Appendices, and add or complete the following:

a Documents and general information to be added to the technical specification: The following front-end documents and general information need to be added to this technical specification:

1. Form 198, Equipment Contract (Recommended for competitive bidding)
2. Supplemental Instructions to Bidders
3. General Conditions

When there is competitive bidding, it is recommended that Form 198 be used. This form covers Notice and Instructions to Bidders, Proposal, and Equipment Contract. For item b above, Supplemental Instructions to Bidders, the user may want to add such items as Bid Submission, Bid Price and Schedule, Bid Acceptance Period, Bid Requirements, and Bid Data. A section on General Conditions could include such items as Definition of Terms, Interpretation of Bid Documents, Addenda to the Bid Documents, Insurance, Method of Payment (if Form 198 is not used), Quantities, and Tabulation of Unit Prices.

b Requirements to the technical specifications to be added or completed by the owner or owner's representative and supplied to the bidders include:

(1) Configuration requirements and other information (Attachment A of the specification or equivalent):

- Pole length and class;
- Structure dimensions;
- Pole Framing showing:
  - Conductor support (type, holes, orientation and height);
  - Overhead Groundwire (OHGW) support (type, holes, orientation and height);
  - Underbuild support (type, holes, orientation and height);
- Embedment depths; and
- Other hole locations and/or requirements.

(2) Strength requirements and Standard class designations for concrete poles.

This specification establishes standard concrete pole sizes. The engineer in the design process needs to select the appropriate standard class pole.

Minimum design loads have to meet NESC requirements which are appropriate for the loading district, the NESC extreme wind load provisions, NESC extreme ice with concurrent wind and any necessary extreme ice and wind conditions with the appropriate load factors and any local codes. The design loads account for all loading cases, including wind on pole and secondary stresses from foundation deflection and rotation, and from vertical loads acting on lateral pole deflection (P-delta effect).

The American Society of Civil Engineers (ASCE) Guidelines for Electrical Transmission Line Structural Loading can be used for developing loads produced by climate, accidents, construction and maintenance. Calculations need to include the vertical, transverse, and longitudinal loads with wind on the structure and the dead weight of the structure for any given loading condition applied simultaneously. All loads require appropriate load factors.

(3) Application Requirements (Attachment B of the Specification to be completed by the Owner).

- Location of climbing and/or working devices and the quantity of each to be supplied with the poles.
- Delivery schedule, F.O.B. location, and name, address, and telephone number of the owner's contact.
- Additional requirements. Additional items such as special pole color (stain, paint, or dye additive), location of bolt holes for other attachment requirements, grounding requirements, cant holes, switch operating mechanisms, etc.
- Pole tests required.

5 INFORMATION TO BE COMPLETED BY THE MANUFACTURER

a The owner should have the following information completed and submitted by each bidder (Attachment C of this Specification or equivalent).

(1) Calculated weight of each concrete pole;

(2) For each standard class pole ultimate loading, provide section and strength properties, including the ultimate, cracking and zero tension moments and deflections, at maximum five foot intervals along the pole;

(3) Pole diameter or width at top, bottom, and groundline;

(4) Tip and butt wall thickness;

(5) Prestress strand - quantity, size and dropout location;

(6) 28-day compressive strength of concrete; and

(7) Diameter taper (in/ft).

b The owner should have the following information completed by the successful bidder prior to pole manufacture:

(1) Type of material of major components (American Society for Testing and Materials (ASTM) number and grade);

(2) Quantity, size and grade of prestressing strands or other reinforcement;

(3) Description of pole including thickness, length, diameter, and taper; and

(4) Design exceptions.

c Test reports as requested by the owner.

BLANK PAGE

TECHNICAL SPECIFICATION FOR STANDARD CLASS PRESTRESSED CONCRETE POLES

1 SCOPE

This specification covers the design, materials, manufacture, inspection, testing, drawings, shipping, and delivery of direct embedded standard class prestressed concrete poles.

2 DEFINITIONS

Admixture - Any material other than water, aggregate, or cement that is used as an ingredient of concrete and added to concrete before or during its mixing to modify its properties.

Appurtenance - Any hardware or structural members that are attached to the concrete pole to make a complete structure.

Bonding, Electrical - The electrical interconnecting of conductive parts, designed to maintain a common electrical potential.

Cant Hole - A through hole in the pole which is used in rotating the pole about its axis during setting. The hole is typically 1-1/2” in diameter and located approximately 4 feet above the *groundline*. Additional through holes below the groundline at 4 foot spacing may be specified to facilitate rotating the pole while it is being lowered into the ground.

Circumferential Cracks - Cracks that parallel a cross-section of a concrete pole.

Cracking Moment - The moment which is developed in the pole at the time the *cracking strength* of the pole is experienced.

Cracking Strength - The point at which the concrete just begins to separate due to exceeding the tensile strength of the concrete on the tension face of the pole.

Deleterious Substance - Any substance that is not desirable in a mixture, usually causing harm in sufficient quantities.

Dropout, Steel Cable - The terminating point of any longitudinal steel that is not continuous for the length of the pole.

Efflorescence - The formation of a white film on the surface of the pole, typically caused by the emergence of chlorides during curing.

Embedment - That portion of the pole which is designed to be located in the ground or other supporting medium.

Factored Load – *See ultimate load*

Groundline - The point at which the *embedment* begins. Resistance from the supporting soils or other medium begins at or below *groundline*. Groundline is defined for transmission line design to determining ground clearances and for locating climbing devices, cant holes, nameplates, etc.

Group of Bolt Holes - All of the holes in which a single hardware assembly will be attached. For an assembly that requires only one bolt hole, that one hole constitutes a group.

Guyed Structure - A structure in which cable supports are used to increase its lateral load resistance.

In-Line Face - The face of the pole which "faces" an adjacent structure in the line.

Load Factor - A multiplier which is applied to each of the vertical, transverse and longitudinal structure loadings to obtain an *ultimate load.*
Longitudinal Cracks - Cracks in concrete that are parallel to the long axis of the pole.

Longitudinal Reinforcement - The *reinforcing steel* which is installed along the long axis of the pole.

Manufacturer - The company responsible for the fabrication of the poles. The *manufacturer* makes the poles based on the design drawings developed by the structural designer, which is the engineer responsible for the structural design of the poles and is usually employed by the manufacturer.

Owner - The Rural Development Utilities Programs borrower procuring the concrete poles.

P-Delta (P-Δ) Moment - The additional moment created by vertical loads acting on the structure which deflects from its unloaded position.

Point of Fixity - The point on the pole at or below *groundline* where the maximum moment occurs. Location of this point is dependent on the characteristics of soils around the embedded portion of the pole

Pole End Squareness - A measure of how perpendicular the finished surface of the pole butt is to the longitudinal axis of the pole.

Pole Failure - The point at which the maximum strength of the pole is realized. Failure usually occurs with crushing of the concrete or permanent deformation.

Pole Sweep - The measure of deviation from straightness along the length of the pole.

Post-Tensioned Steel Strand - The longitudinal reinforcement that has been tensioned after the concrete has hardened.

Prestressed Concrete - Reinforced concrete in which internal stresses have been introduced to reduce potential tensile stress in concrete resulting from loads.

Pretensioned Steel Strand - The longitudinal reinforcement that has been tensioned before concrete is placed. Also referred to as prestressed steel strand.

Pyrite Staining - A pale brass-yellow colored stain in the concrete caused from the concrete mixture containing an excess amount of iron disulfides.

Reinforcing Steel - Any steel for the purpose of reinforcement of the concrete, including *longitudinal reinforcement*, *spiral reinforcement*, and deformed reinforcing bars.

Release Strength - The minimum concrete strength that is necessary before the *pretensioned strands* can be released.

Spiral Reinforcement - Steel reinforcement, continuously wound in the form of a cylindrical helix that encloses the longitudinal steel.

Spun Concrete Pole - A pole which is manufactured by placing *prestressed steel strands* and *spiral reinforcement* in a mold, adding fresh concrete and spinning the mold to form the pole through centrifugal force.

Standard Class Pole - A direct embedded concrete pole which is designed according to a standardized strength and loading criteria established by the Owner.

Statically Cast Concrete Pole - A pole which is manufactured by placing *prestressed steel strands* and *spiral reinforcement* in a mold, then adding fresh concrete to form the pole.

Tip Load - The horizontal load which is applied to the *standard class pole* at a distance of 2 feet from the pole tip.

Ultimate Load - The maximum design load which includes the appropriate *load factor*.

Ultimate Moment Capacity - The moment which is developed in the pole at the time the *ultimate strength* of the structure is realized.

Ultimate Strength - The maximum strength in the stress-strain diagram. For the pole, this is considered to be the point at which the pole fails, usually with crushing of the concrete.

Yield Strength - The minimum stress at which a material will start to physically deform without further increase in load or which produces a permanent strain. This is known as the elastic limit of the material.

Zero Tension Strength - The moment at which a crack that was previously created by exceeding the cracking moment strength will open again. Under this condition, an applied moment will not cause any tensile stress in the concrete. It will always be less than the cracking moment strength.

3 CODES AND STANDARDS

Codes, standards, or other documents referred to in this specification are to be considered as part of this specification. In the event of a conflict between this specification and the National Electrical Safety Code (NESC), the NESC shall be followed. In the event of a conflict between this specification and all other referenced documents, this specification shall be followed. If a conflict between several referenced documents occurs, the more stringent requirement shall be followed. If clarification is necessary, contact the owner.

The most recent editions of the following codes and standards shall be followed in the design, manufacture, inspection, testing, and shipment of prestressed concrete poles.

a American Concrete Institute (ACI):

ACI 318, Building Code Requirements for Structural Concrete

b Prestressed Concrete Institute (PCI):

MNL 116, Manual for Quality Control for Plants and Production of Precast Prestressed Concrete Products

c American Welding Society (AWS):

AWS D1.1, Structural Welding Code - Steel

d American Society for Testing and Materials (ASTM):

ASTM A416	Standard Specification for Steel Strand, Uncoated Seven-Wire For Prestressed Concrete
ASTM A421	Standard Specification for Uncoated Stress-Relieved Steel Wire For Prestressed Concrete
ASTM A615	Standard Specification for Deformed and Plain Carbon-Steel Bars For Concrete Reinforcement
ASTM A641	Standard Specification for Zinc-Coated (Galvanized) Carbon Steel Wire
ASTM A706	Standard Specification for Deformed and Plain Low-Alloy Steel Bars For Concrete Reinforcement
ASTM A1064	Standard Specification for Carbon-Steel Wire and Welded Wire Reinforcement, Plain and Deformed, for Concrete
ASTM C31	Standard Practice for Making and Curing Concrete Test Specimens in the Field
ASTM C33	Standard Specification for Concrete Aggregates
ASTM C39	Standard Test Method for Compressive Strength of Cylindrical Concrete Specimens
ASTM C131	Standard Test Method for Resistance to Degradation of Small-Size Coarse Aggregate by Abrasion and Impact in the Los Angeles Machine
ASTM C150	Standard Specification for Portland Cement
ASTM C172	Standard Practice for Sampling Freshly Mixed Concrete
ASTM C260	Standard Specification for Air-Entraining Admixtures for Concrete
ASTM C289	Standard Test Method for Potential Alkali-Silica Reactivity of Aggregates (Chemical Method)
ASTM C494	Standard Specification for Chemical Admixtures For Concrete
ASTM C618	Standard Specification for Coal Fly Ash and Raw or Calcined Natural Pozzolan for Use in Concrete
ASTM C881	Standard Specification for Epoxy-Resin-Base Bonding Systems for Concrete
ASTM C935	Standard Specification for General Requirements for Prestressed Concrete Poles Statically Cast
ASTM C1089	Standard Specification For Spun Cast Prestressed Concrete Poles

e Industrial Fasteners Institute (IFI):

Fastener Standards

f Institute of Electrical and Electronics Engineers (IEEE)
National Electrical Safety Code (NESC)

g American Society of Civil Engineers/Prestressed Concrete Institute (ASCE/PCI)
Joint Committee on Concrete Poles:

Guide for the Design of Prestressed Concrete Poles, latest edition

4 GENERAL REQUIREMENTS

The design, fabrication, processes, tolerances, and inspection of poles shall conform to the following:

a Design Requirements:

(1) Pole designs shall be prepared from the attached configuration drawings, design loads and strength requirements for the standard class poles. Poles shall be designed by the ultimate strength method as explained in ACI 318 and in accordance with the PCI Guide for the Design of Prestressed Concrete Poles. The point-of-fixity shall be considered to be located at a distance from the pole butt which is equal to 7% of the pole length. The pole shall be symmetrically designed such that the strength required in any one direction shall be required in all directions about the longitudinal axis. The poles shall be uniform taper from tip to butt.

(2) Using the corresponding values in Table 1, the poles shall be designed for the following requirements as illustrated by Figure 1:

(a) The reinforcing steel shall begin at the pole tip and the pole shall develop the minimum ultimate moment capacity required in Table 1 at a distance of five feet from the pole tip;

(b) The pole shall develop the minimum ultimate moment capacity along the pole to the point-of-fixity which is calculated by multiplying the tip load in Table 1 by the distance from the tip load; and

(c) The reinforcing steel required at the point-of-fixity shall continue to the pole butt.

(3) The poles shall be designed to withstand the specified tip loading without exceeding a pole deflection of 15 percent of the pole height above the point of fixity when tested under short term loading conditions in accordance with the horizontal test procedures described in the *Guide for the Design of Prestressed Concrete Poles* (ACSE/PCI Joint Committee on Concrete Poles).

FIGURE 1
Minimum Ultimate Moment Capacity Diagram along the Pole

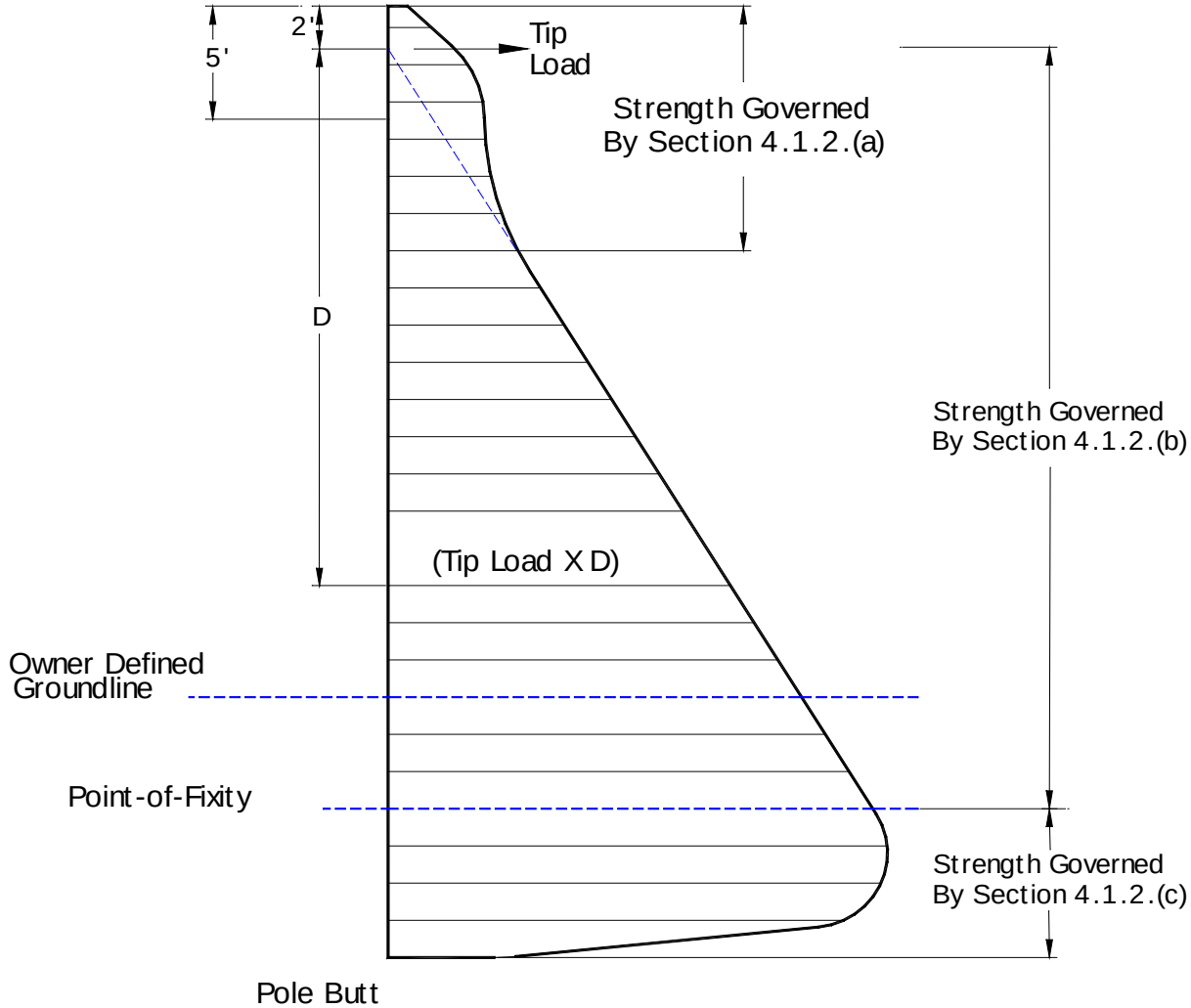

(4) The poles shall be designed to withstand 40 percent of the specified tip loading without exceeding a pole deflection of 5 percent of the pole height above the point of fixity when tested under long term loading conditions in accordance with the horizontal test procedures described in the *Guide for the Design of Prestressed Concrete Poles* (ASCE/PCI Joint Committee on Concrete Poles).

(5) Poles shall be designed so that the cracking strength of the pole exceeds 40 percent of the required ultimate strength.

(6) Poles shall be designed so that the zero tension strength of the pole exceeds 28 percent of the required ultimate strength.

(7) Poles shall be designed to withstand a one-point (tilting) pickup during erection. The poles shall be designed for two-point pickup for horizontal handling. Poles shall be designed for the loads generated from handling and erecting without exceeding the cracking moment capacity of the poles.

TABLE 1
Strength Requirements

Standard Class Designations For Concrete Poles	Minimum Ultimate Moment Capacity At Five Feet From Pole Tip(Ft.-Kip)	Tip Load (Lbs.)
C-12.0	96	12,000
C-11.0	88	11,000
C-10.0	80	10,000
C-09.0	72	9,000
C-08.0	64	8,000
C-07.4	57	7,410
C-06.5	50	6,500
C-05.7	44	5,655
C-04.9	38	4,875
C-04.2	32	4,160
C-03.5	27	3,510
C-02.9	23	2,925
C-02.4	19	2,405
C-02.0	15	1,950

(8) The pole design shall include allowances for loads from handling, transportation and erection without failure, permanent deformation, or damage to the pole when handled according to the manufacturer's instructions.

(9) The design of each pole shall be performed using the applicable codes and standards listed in Section 3 of this specification.

(10) Pole design and design calculations shall be the responsibility of the manufacturer.

b Materials

(1) The chemical properties of materials used in the manufacture of the poles shall meet the requirements of the applicable ASTM specification and be such that noticeable pyrite staining or efflorescence due to sulfates and/or chlorides does not occur.

(2) All anchors and inserts provided by the manufacturer shall be hot dip galvanized steel, stainless steel, or die-cast zinc alloy. Cadmium-plated and aluminum material shall not be used. All inserts shall be noncorrosive materials designed and manufactured for the intended purpose, shall not stain or react unfavorably with the concrete or fasteners, and used according to manufacturer's recommendations. If the manufacturer considers lifting devices necessary or desirable, suitable flush inserts may be cast into the pole with removable lifting attachments.

(3) The concrete shall have a minimum 28-day compressive strength of 8,000 psi for spun concrete and 5,000 psi for statically cast concrete with a maximum water-cement ratio of 0.40. Higher strengths and lower water-cement ratios are encouraged and may be necessary to offset steel cover requirements.

(4) The cement shall be either Type I, II, III, or V Portland cement conforming to ASTM C150.

(5) Fine aggregate shall be a natural sand, manufactured sand, or a combination thereof, consisting of clean, strong, hard, durable uncoated particles conforming to ASTM C33, and all specifications included therein. The aggregate shall be well graded from No. 4 to No. 200 sieve. Deleterious substances shall not comprise more than 5 percent of the sample.

(6) Coarse aggregate shall be clean, tough, crushed stone conforming to ASTM C33, and all specifications included therein. The aggregate shall be well graded from a 3/4 inch to a No. 8 sieve with no more than 5 percent of the sample passing through a No. 8 sieve. Deleterious substance content shall not exceed 5 percent of the sample. Resistance to abrasion shall not exceed 40 percent as tested in conformance with ASTM C131. Absorption shall be less than 4 percent or aggregate shall be saturated with water prior to use in concrete.

(7) Aggregate shall be tested in accordance with ASTM C289 to determine an alkali-aggregate reaction. Crushed rock or partially crushed rock shall be the source of the aggregate.

(8) Water shall be clean, free from undesirable amounts of oils, acids, alkalis, salts, organic materials, or other deleterious substances, and shall not contain concentrations of chloride ions in excess of 500 ppm or sulfate ions in excess of 1000 ppm.

(9) Chemical admixtures shall conform to ASTM C494. Air entraining admixtures can be used if approved by the owner and conform to ASTM C260. Fly ash shall conform to ASTM C618. Admixtures shall not contain chloride ions in quantities that would cause the total chloride content of the concrete to exceed 0.06%.

(10) Prestressing steel mechanical properties, reinforcing steel and spiral reinforcement shall be in accordance with the applicable ASTM specifications listed in Section 3 of this specification.

(11) Concrete mix design requirements listed above can be altered with the owner's approval.

c Workmanship

(1) The pole cross sectional shape shall be clearly described by the manufacturer at the time of bidding and shall be round, 12-sided, 8-sided, 6-sided, or square. Allowable shapes should be specified by the owner in the Application Requirements (see Attachment B).

(2) The pole shall have a uniform taper from top to butt.

(3) Deviation of the pole from straightness is allowed in one plane and one direction only. The detensioning operation shall be performed in a manner to keep the prestressing forces symmetrical.

(4) Prestressing steel stress limits shall not exceed:

(a) 80 percent of the ultimate strength or 94 percent of the yield strength or the maximum value recommended by the manufacturer of prestressing steels or anchorages for jacking force;

(b) 74 percent of the ultimate strength or 82 percent of the yield strength immediately after prestress transfer; and

(c) 70 percent of the ultimate strength for post-tensioned steel at anchorages and couplers immediately after anchorage.

(5) Spiral reinforcement shall cover the entire pole length. The minimum clear spacing of spiral reinforcement in the top 2 feet and bottom 2 feet of the pole shall be 4/3 of the maximum coarse aggregate or three times the strand diameter, whichever is larger, but not less than one inch. The maximum clear spacing for the remainder of the pole shall not exceed 4 inches.

(6) Clear distance between prestressing steel strands shall be either 4/3 times the maximum aggregate size or 3 times the strand diameter, whichever is larger. In the event that this condition is not met at the pole tip, closer

spacing would be permitted provided that the placement of concrete can be accomplished satisfactorily, adequate stress transfer can take place, and appropriate provisions are used for maintaining spacing between the prestressing steel strands.

(7) The manufacturer shall provide holes through each pole as specified on the pole framing drawing(s), included as Attachment A. Preformed holes shall be cast using rigid PVC inserts (or other suitable material) held firmly in place. Plugs may be used with the owner's approval. Preformed inserts shall be sized for the specified hole diameter and shall be full length of pole diameter for all through holes. Unless otherwise noted on the drawings, holes shall be perpendicular to and pass through the centerline of the pole. The owner shall be notified of any hole orientation that may be difficult, impractical, or impossible to place as shown on the pole framing drawing. The owner shall approve any deviation in orientation prior to manufacture.

(8) The pole manufacturer shall provide preformed inserts at two locations to allow air circulation within the pole. Inserts shall be 1 inch minimum diameter and shall have a louvered opening. The inserts shall be located within 10 feet of the tip and within 10 feet above the groundline.

(9) Holes may be drilled through the pole wall as long as the longitudinal reinforcement is not damaged in any way and is properly sealed. Hole drilling techniques shall be utilized which introduce little to no spalling on the inside face of the pole wall.

(10) The longitudinal steel shall not be cut for any reason unless approved by the owner. The owner may reject any pole in which the longitudinal steel is cut. All exposed steel resulting from drilled holes shall be covered with an epoxy paste per ASTM C881 Type III. Areas with moderate or severe spalling shall be cleaned and reformed with an epoxy paste or epoxy concrete per ASTM C881 Type II. If a PVC liner is to be installed in the drilled hole where steel has been exposed, epoxy is to be applied prior to installation.

(11) The owner shall have the right to reject any pole in which the performance of a bolted connection may be reduced due to the lack of a cleanly preformed or drilled hole.

d Manufacturing Tolerances:

Manufacturing tolerances shall be limited to the following:

Pole Length	±2 inches, or ±1 inch +1/8 inch per 10 feet of length, whichever is greater (eg., a 120 foot pole shall have a length of 120 feet ± 2 1/2 inches)
	-6 inches or +12 inches for assembled spliced structure
Pole Diameter or Width	±1/4 inch as measured at any location on the pole
Wall Thickness	-1/4 inch or -12% of wall thickness. (Note: This requirement may be waived for small areas if the structural adequacy and durability of the pole are not impaired.)
Pole End Squareness	±1/2 inch per foot of pole diameter
Pole Sweep	1/4 inch per 10 feet of pole length
Pole Weight	+10% and -5% of calculated value
Location of longitudinal reinforcement	± 1/4 inch for individual elements and ±1/8 inch for the centroid of a group
Location of spiral reinforcement	Spacing may vary ± 25 percent, but the total required quantity per 5 feet of pole length shall be maintained.
Location of a group of bolt holes from top of the pole	±2.0 inches
Location of bolt holes within a group of bolt holes	±1/8 inch
Location of centerline between groups of bolt holes	±1.0 inch
Bolt hole diameter	±1/16 inch of specified diameter (Note: The specified diameter is up to 1/4 inch greater than bolt diameter.)
Bolt hole alignment	Not to vary from the longitudinal pole centerline of that group of holes by more than 1/8 inch
Location of identification plate, blockout, and handhole	±2 inches

e Grounding

(1) An external pole ground wire shall be used in order to verify continuity of the pole ground while in service. The pole ground wire shall extend one foot above the top of the pole. Threaded inserts for attaching ground wire clips that hold the external ground wire shall be sized and positioned per the attached drawings.

(2) Except for bonding of the steel tendons, there shall be no internal pole grounds. To provide good electrical continuity, the spiral reinforcement shall be securely and electrically tied to each longitudinal reinforcing steel member it contacts within 1 foot of the top and butt of the pole. A minimum of one longitudinal steel strand shall be bonded electrically to threaded bronze inserts located within 2 feet of the pole top and butt, and at one foot below groundline (See Attachment A for location of groundline). For spliced poles an additional bond shall be provided above and below the splice to a threaded bronze insert within 24 inches of the splice. Steel splice sections shall have the appropriate number of grounding attachments. This bonding system shall be noncorrosive and shall be approved by the owner.

(3) If required by the owner, manufacturer shall provide ground wire clamps for all ground wire attachments.

f Climbing Devices

(1) Design Loads

(a) Step Bolts and removable steps: The step bolts, removable steps and attachment to the pole shall be designed to support a minimum of a 300 pound worker and equipment multiplied by a load factor as defined in paragraph 4.6.2. The load shall be at the outer edge of the step or bolt.

(b) Removable Ladders: The ladder and each attachment to the pole shall be designed to support a minimum of a 300 pound worker and equipment multiplied by a load factor as defined in paragraph 4.6.2. The load shall be at the outer edge of the step or bolt.

(2) Load Factor: A load factor of 2.0 shall be applied to the design loads in 4.6.1. These loads shall be supported without permanent deformation.

(3) Location: Climbing devices shall start 8 feet above groundline and extend to the pole top unless specified by the owner. The climbing device shall be spaced such that each step is 1 foot 6 inches apart and orientated to provide maximum ease of climbing. They shall be located to avoid interference with other attachments.

(4) Finish: Step bolts, removable steps, and removable ladders shall be hot dipped galvanized.

(5) Intent of steps/ladder: This system is intended for climbing the pole and working on the structure. It is not intended to replace the worker's fall arrest system.

g Inserts

(1) Inserts shall not fail before the pole reaches ultimate strength, unless permitted by the owner.

h Cover

(1) The minimum clear concrete cover over all longitudinal reinforcement and all spiral reinforcement shall be 3/4 inch for spun poles and 1 inch for statically cast poles. Poles not meeting this requirement shall be rejected except as allowed by Section 4.8.2.2.

(2) The minimum specified wall thickness at all points along the pole for spun concrete poles shall be 2.5 inches and for statically cast poles shall be 3.0 inches.

(a) For spun poles, an actual wall thickness of less than 2.5 inches of spun concrete may be allowed from the pole tip to 3 feet below the pole tip provided the cover requirements of Section 4.8.1 are met in the spinning process and provided the pole can meet all other requirements of the specifications.

(b) The owner shall, as soon as possible, be notified of any poles with an inside clear cover less than 3/4 inch of spun concrete or less than 1 inch of statically cast concrete within 3 feet of the pole tip. At the owner's sole discretion, the owner may reject the pole or may allow the pole to be repaired by swabbing the interior with an epoxy liner (per ASTM C881 - Type V, Class B or C) and plugging with 3,000 psi. concrete to the owner's satisfaction to a distance of 42 inches from the tip. No pole shall be plugged or considered for acceptance by the owner unless assurance is made by the manufacturer that the repaired pole can meet all requirements of this specification.

i Splices

(1) Flange-bolted or slip-joint type of splices are permitted. When required, flange-bolted type splice shall be used at guyed structures.

(2) The reinforcing steel and connection apparatus comprising the splice shall be properly anchored as part of the pole. The pole shall be designed to fail before the splice fails by yielding of the splice steel.

(3) The axis of the pole shall not be distorted after the pole is mated. Shims shall not be used to straighten the pole unless approved by the owner. The owner reserves the right to reject a pole based on the improper mating of a pole splice.

j Appurtenances

(1) Appurtenance material shall be supplied by the owner. The owner shall also provide the manufacturer of the connectors and/or members with the locations, orientations, sizes, types, and strength capacities of the appurtenances.

(2) The concrete pole manufacturer is responsible for the proper design coordination and fit up of all appurtenance connections and members to the pole(s). The manufacturer shall notify owner if any appurtenance material supplied by owner will not result in properly designed structure.

k Finishing

(1) The surface of the pole shall have a smooth finish with no unsealed cracks. Cracks shall be sealed either by use of an epoxy injection system following the epoxy manufacturer's specifications, or by V-notching the crack on a 1:1 slope to a minimum depth of 1/4 inch, then filling the V-notch with an epoxy seal per ASTM C881 Type IV. Covering the crack with an epoxy coating is not allowed.

(2) Small cavities caused by air bubbles, honeycomb spots, or other small voids, shall be cleaned thoroughly, saturated with water and then carefully pointed with a cement mortar. A small cavity is defined as one not larger than 1/2 inch in diameter or deeper than 1/4 inch.

(3) If any cavities or voids absorb water which indicate the void extends into wall of the pole, then the pole shall be rejected.

(4) The manufacturer shall seal both ends of the pole and protect the steel strands from corrosion using a suitable epoxy. The system used shall be approved by the owner.

(5) The center void at the top end of the pole shall be sealed with a minimum 6 inch thick 1000 psi strength concrete plug and the pole tip capped with a suitable epoxy-aggregate mortar securely bonded to the pole, or the top end of the pole shall be fitted with a galvanized steel or polymer cap securely held in place with mechanical fasteners or epoxy. Sharp edges shall be tooled to form smooth, chamfered corners. The manufacturer shall assure that the capping method will prevent weather intrusion into the pole and prevent pole tip deterioration.

(6) The center void at the bottom end of the pole shall be sealed with a minimum 12 inch thick 1000 psi strength concrete plug. The plug shall be securely bonded to the pole and shall be tooled to form a smooth, uniform bearing surface. A 2” diameter formed hole shall be provided in the center of the plug to allow for drainage.

(7) Where application of epoxy-aggregate mortar is specified, the surface of the pole where the mortar is to be applied shall first be coated with the epoxy coating. This coating shall be allowed to cure to a tacky, but not hardened state, before the mortar is applied. After the mortar has been applied and allowed to cure for 24 hours, a top coat of epoxy coating, 5 mil thick, shall be applied over the mortar and the surrounding area of the pole.

l Marking

(1) Each pole shall be identified with the manufacturer's identification plate. The following information shall be stamped into the plate with letters not less than 1/4 inch in height:

- Manufacturer's name;
- Day, month, and year of manufacture;
- Structure number;
- Length and class of pole;
- Ultimate moment capacity at groundline;
- Pole framing designation (per framing guide) or pole type; and
- Owner's name.

(2) The manufacturer's identification plate shall be fabricated from a noncorrosive, nonstaining metal such as bronze, brass, Series 300 stainless steel, or an aluminum alloy that will not react unfavorably with concrete. The plate shall have suitable anchor or anchors on the back of the plate to permit bonding to the pole.

(3) The identification information listed above may be cast into the surface of each pole. These marks shall be at least 3/4 inch in height and 1/8 inch deep.

(4) Unless otherwise directed by the owner, the identification plate or cast in-place markings shall be located on an in-line face of the pole in the direction of the transmission line. The bottom of the identification plate or last line of the cast in-place markings shall be located five feet above the defined groundline.

(5) Each pole shall be marked with the information listed below. A permanent marker shall be used and the writing shall be small but legible. For spliced poles, each section shall be marked as below:

(a) Support points;

(b) Two-point pickup location for handling the pole in the horizontal position;

(c) One-point pickup location for use in raising the pole to a vertical position and handling during the setting operation;

(d) Pole length and class, fabrication number, structure number, and pole framing guide number on the butt of the pole; and

(e) Cant hole locations, if required by owner.

5 INSPECTION AND TESTING

a General

(1) Manufacturing and testing procedures shall be in compliance with applicable codes and standards listed in Section 3 in this specification.

(2) Upon request, the manufacturer shall furnish the owner with certified test reports for the steel and concrete used.

b Inspection

(1) The manufacturer shall make adequate tests and inspections to determine that each of the poles furnished is in strict accordance with this specification. At the request of the owner, the manufacturer shall submit a quality assurance report to the owner prior to the shipment of each pole and shall include the following minimum information:

- Fabrication number and owner's structure number;
- Minimum and maximum tip wall thicknesses and steel coverages (to inside and outside) measurements shall be made at 3 inches from the tip;
- Minimum and maximum butt wall thicknesses and steel coverages (to inside and outside) measurements shall be made at 3 inches from butt;
- Condition of pole interior and evidence of exposed rings or reinforcement steel;
- Proper hole and insert locations and sizes;
- Evidence of cracking during or after two-point handling;
- Actual manufactured pole weight;
- Report of any repairs made to the pole;
- Date of manufacture and inspection(s); and
- Inspector's seal.

(2) All material and workmanship shall be subject to inspection, examination, and test for conformance to the requirements of this specification by the owner. The inspection, examination, or testing could be done at any time during material procurement, manufacturing, storage periods, transit, or at the pole destination. Inspection, examinations, and tests may be waived by the owner, but in no case shall this be interpreted as releasing the manufacturer from the manufacturer's responsibilities for delivering poles that meet the requirements of this specification.

(3) The owner shall have free entry, at all times, while work is being carried on, to all parts of the manufacturer's plant where manufacture of the owner's poles is being performed. The manufacturer shall afford the owner reasonable facilities, without charge, to satisfy the owner that the poles are being manufactured in strict accordance with this specification.

(4) The manufacturer shall furnish certified test reports to the owner, upon request, showing the results of all of the tests required by this specification and applicable reference specifications.

(5) Tests shall be in accordance with all applicable standard specifications and codes.

(6) Failure of the manufacturer to comply with these specifications will be sufficient reason for rejection of any or all poles which do not comply with these specifications.

c Concrete and Aggregate Testing

(1) Concrete used on owners' poles shall have the quality to meet the design strength and other requirements included in this specification.

(2) For manufacturers that batch their own concrete, the manufacturer shall take a minimum of 8 concrete test cylinders per representative sample. Samples shall be taken at minimum intervals of one per day, one per 25 cubic yards of concrete batched, and with each change in raw material supplier for batches used to make the owner's poles. The test cylinders for each day’s concrete that is batched shall be tested for compressive strength as follows:

(a) Minimum of one strength test for determining release strength;
(b) Minimum of one strength test at 7 days;
(c) Minimum of one strength test at 14 days; and
(d) Minimum of one strength test at 28 days.

A strength test shall be the average of the strengths of two or more cylinders, depending on cylinder size, made from the same sample of concrete.

(3) For manufacturers that acquire concrete from outside sources, test cylinders shall be taken from each truck load of concrete and tested in accordance with this specification.

(4) Test cylinders shall be prepared, then cured in the same curing environment as the pole itself or cured per the applicable ASTM specification.

(5) Upon request from the owner, the manufacturer shall provide owner statistical data on concrete strength quality in accordance to applicable ACI and ASTM specifications. A correlation factor between rodded cylinders and the spun concrete, substantiated by test data, shall be provided.

d Structure Testing

(1) Details of all test procedures contained herein and methods of measuring and recording test loads and deflections shall be specified by the manufacturer and approved by the owner prior to manufacture.

(2) Material procurement for test poles shall be identical to material procurement procedures for regular production run poles.

(3) The design load testing of any specific pole shall be on a full-scale basis at the manufacturer’s facility or at a location as specified by the owner. Costs for such testing shall be the responsibility of the owner, shall be separated from the manufacturer's bid, and shall be negotiated in advance of any test preparation.

(4) The number, location, direction, holding time, sequence, and increments of the test loads along with the number, location, and direction of deflection readings for an individual pole test shall be approved by the owner prior to pole testing.

(5) The method of attaching the test loads to the pole, applying the test loads, measuring and recording the test loads, and measuring and recording the deflections shall be approved by the owner prior to pole testing.

(6) A full report listing results shall be submitted to the owner after completion of all testing. Copies of mill test reports shall be included in the load test report. The report shall also include a complete description of the load tests with diagrams and photographs. If required, the manufacturer shall provide the owner with the following testing data:

(a) Location of testing;

(b) Method of full scale testing: upright or horizontal; and

(c) The pole tester shall issue the owner three (3) copies of the Pole Test Report. This report shall include descriptions, tools, and drawings describing the above test.

(7) Use of any factory tested poles to meet order requirements shall be determined by the owner.

6 SHIPPING AND DELIVERY

a Shipping

(1) Each shipment shall be accompanied by a list of all parts, identifiable by structure type and number. Bolts and miscellaneous hardware shall be identified by the list for match up with the respective pole shaft. All parts required for any one structure shall be in one shipment, unless otherwise agreed to by the owner.

(2) The owner and owner's representative shall be notified prior to shipment that such shipment is to take place, and the owner reserves the right to postpone a shipment. The owner has the right to inspect the components prior to shipment. The notification of a shipment shall give quantities, weight, name of common carrier used, and expected time of arrival.

(3) Poles shall be lifted and supported during manufacturing, stockpiling, and transporting only at the lifting or support points, or both, as designed by the manufacturer.

(4) Transportation and site handling shall be performed with acceptable equipment and methods by qualified personnel. The manufacturer shall exercise precaution to protect poles against damage in transit.

(5) Poles shall be sufficiently cured before shipment to resist forces from handling, transportation, and construction.

(6) Handling instructions shall be included with the pole shipment.

b Delivery

The owner (or the owner's construction contractor) may take delivery at a designated location or with the delivering carrier's cooperation and consent, have the poles transported to the installation locations with the carrier's equipment. The manufacturer shall coordinate and cooperate with the owner to ensure smooth and efficient delivery of poles. The owner will provide all labor, equipment, and materials for the unloading of poles at the project site. A pole is considered delivered when the pole is lifted from the trailer or semitrailer of the delivery carrier by the owner.

7 DRAWINGS AND INFORMATION TO BE SUPPLIED BY THE MANUFACTURER

a Information to be Supplied with the Proposal (See Attachment C of this specification)

(1) Calculated weight of each concrete pole.

(2) For each standard class pole, provide section and strength properties, and the ultimate, cracking, and zero tension strengths at maximum five foot intervals along the pole to demonstrate conformance with the requirements of Sections 4.1.2, 4.1.5, and 4.1.6.

(3) For each standard class pole, provide pole deflection calculations at maximum five foot intervals along the pole using the specified tip loading in order to demonstrate conformance with the requirements of Sections 4.1.3 and 4.1.4.

(4) Pole cross sectional shape and diameter or width at top, bottom, and groundline.

(5) Tip and butt wall thickness.

(6) Prestress strand - quantity, size and dropout location.

(7) Design strength of concrete (28 day compressive strength).

(8) Diameter taper, inches/foot.

b Information and Drawings to be Supplied for Owner's Approval Prior to Fabrication:

(1) After the manufacturer's proposal has been accepted, the manufacturer shall submit to the owner two prints (or electronic PDF if acceptable to the owner) of each fabrication drawing. One set of these drawings will be returned to the manufacturer with indication of review corrections. Where a correction is required, two sets of revised prints shall be resubmitted to the owner. These prints shall be marked "Revised" and dated.

(2) Final fabrication drawings for each different framing pattern and pole calculations for each load case shall be submitted to and approved by the owner before release of order for manufacture.

(3) All design and detail drawings shall be reviewed and approved by the owner before pole manufacture.

(4) Information to be Provided on Drawings: The manufacturer shall be responsible for the correctness of dimensions and details on the drawings. The review of such drawings by the owner shall not relieve the manufacturer of this responsibility.

Drawing titles shall clearly indicate the owner's name and pole-type identification. Each detail drawing shall include the following minimum information:

(a) Complete dimensional information;

(b) Description and location of all steel reinforcements, and, if dropout system is used, the location of each steel cable dropout;

(c) Twenty-eight day strength of concrete and strength of concrete at time of release of pretensioning strands;

(d) Steel strand prestress loads;

(e) Size, description, quantity, and location of all holes and hardware that is a part of the pole;

(f) Weight and location of the center of gravity of the pole;

(g) Location of pickup points and storage points. Both pickup locations and recommended storage locations shall be shown;

(h) Location of climbing devices and grounding inserts;

(i) Pole identification plate location and details;

(j) Location of groundline;

(k) The ultimate moment and cracking moment capacities at the groundline; and

(l) Any other special information deemed necessary by the manufacturer and owner.

8 APPROVALS, ACCEPTANCE, AND OWNERSHIP

a Final designs must be approved by the owner before material ordering. Material ordering and fabrication prior to approval of the owner will be at the manufacturer's risk. Award of the contract to the manufacturer does not constitute acceptance of design calculations submitted with the bid. If corrections are required in the final pole designs due to manufacturer's errors, omissions, or misinterpretations of the specifications, the quoted price shall not change. Approval of the drawings and calculations by the owner does not relieve the manufacturer of responsibility for the adequacy of the design, correctness of dimensions, details on the drawings, or the proper fit of parts.

b Upon delivery, poles shall be free of defects and blemishes which would have a detrimental effect on the structure capacity and/or longevity of the pole. They also shall be smooth, attractive, unscarred and in new condition. Poles not meeting these requirements shall be repaired or replaced by the manufacturer at no additional cost to the owner.

c Poles failing to meet strength requirements, poles with circumferential or longitudinal cracks, poles failing to meet manufacturing tolerances or cover requirements, poles with exposed steel, poles with cavities that absorb water, and spliced poles that do not fit together properly or are distorted after mating shall be rejected by the owner and replaced by the manufacturer at no cost to the owner.

d If the delivered weight of a pole will exceed the calculated weight by 5 percent, the manufacturer shall notify the owner of the actual weight before the pole is shipped. Any pole whose delivered weight is outside the tolerances specified in Section 4.4 may be rejected by the owner.

e All final drawings shall become the property of the owner, who shall have full rights to reproduce and use them for the owner's purposes, but shall not share them with other concrete pole suppliers.

9 LIST OF ATTACHMENTS

(Attachments A and B are to be completed by the engineer. Attachment C is to be completed by the manufacturer.)

- Attachment A, Structure Dimensions, Pole Framing Drawings, and Details
- Attachment B, Application Requirements
- Attachment C, Bid Summary

BLANK PAGE

Attachment A
Structure dimensions,
pole framing drawings, and details

BLANK PAGE

Attachment B
Application Requirements

For appurtenance material supplied by the owner, owner shall provide manufacturer, connector and/or member locations, orientations, sizes, types, and strength capacities with this Attachment.

1. Climbing device desired by owner _____

2. Pole cross-sectional shape (check all allowed)
   □ Round □ 12-Sided □ 8-Sided □ 6-Sided □ Square □ Other _____

3. Delivery schedule _____

4. Free on board destination (F.O.B.) _____

5. Additional requirements (below)

BLANK PAGE

Attachment C

Standard Concrete Pole Bid Summary (Information to be supplied with the bid)					
DESIGN INFORMATION					
Pole framing drawing					
Pole Class					
Pole Length					
POLE DESCRIPTION					
Top Diameter					
Groundline Diameter					
Bottom Diameter					
Taper (in/ft)					
GENERAL					
Pole Wt/ each					
Tip Load					
Point of Fixity Loc					
Steel (ASTM/yield)					
Cross section shape					
Splice joint type					
CALCULATIONS AT THE GROUNDLINE (includes LF)					
Moment					
Shear					
Axial					
Cross Sectional Area					
CALCULATIONS AT THE POINT OF FIXITY (includes LF)					
Moment					
Shear					
Axial					
Cross Sectional Area					
WALL THICKNESS					
Top					
Groundline					
Bottom					
DEFLECTION (Top)					
COST SUMMARY					
COST/POLE					
NUMBER OF POLES					
TOTAL COSTS					

COMMENTS:	TRANSMISSION LINE POLES		
	ATTACHMENT C BID SUMMARY – DESIGN INFORMATION,WEIGHTS, AND PRICE INFORMATION		
		(INFORMATION TO BE SUPPLIED WITH THE PROPOSAL)	

BLANK PAGE

Attachment C (continued)

(The Manufacturer shall also supply the following information with the proposal: (a) for each standard class pole, provide section and strength properties, and the ultimate, cracking and zero tension strengths at maximum five foot intervals along the pole to demonstrate conformance with the requirements of Sections 4.1.2, 4.1.5, and 4.1.6 of this specification;. and for each standard class pole, provide pole deflection calculations at maximum five foot intervals along the pole using the specified tip loading in order to demonstrate conformance with the requirements of Sections 4.1.3 and 4.1.4 of this specification).

BLANK PAGE

APPENDIX A
COMMENTARY

1 General

The necessity of a clear bid specification for the purchase of standard class concrete poles is very important to the bid evaluation process and the acquisition of structurally adequate poles. The specification should contain sufficient requirements and information so that all bids can be evaluated equally and so that the manufacturer clearly understands what is expected of the manufacturer.

Scope

While this standard class concrete pole specification does not prohibit the application to poles which are guyed, which are subjected to unbalanced lateral loads, or which have deflection or other special limitations, the owner must be prudent in this type of application.

It is recognized that, with the proper understanding and usage of some computerized structural analysis and transmission line design programs, it is possible to select a standard class concrete pole which might otherwise be beyond the scope of this specification. The owner must be sure that combined bending and buckling analysis is performed, that cracking strength and zero tension strength is evaluated, and that deflections are properly modeled.

The owner should recognize when the design of a concrete pole may be more prudently accomplished using the *Guide Specification for Prestressed Concrete Pole and Concrete Pole Structures*, RUS Bulletin 1724E-206, which requires the actual loading conditions to be specified. In using RUS Bulletin 1724E-206, the manufacturer assumes full responsibility in designing and manufacturing a structurally adequate pole.

Standard Class Pole

In some cases, utilities prefer to specify certain concrete poles to be designed according to a standardized loading criteria, much like the standard classifications for wood poles.

In utilizing standard class concrete poles, a complete structural analysis is still required for all structures. All appropriate loading criteria are considered in the analysis. Once the required concrete pole strength is determined, a standard class concrete pole which meets the actual loading conditions can be selected. A design example is shown in Appendix C.

This specification was developed to establish a standard classification system and to assist the owner in procuring a standard class concrete pole which is properly designed for the intended loading criteria.

This guide specification attempts to eliminate ambiguity in specifying and purchasing standard class concrete poles. Since it has become a widespread practice in the industry

to design and manufacture poles which are based on the wood pole classification system of the American National Standards Institute (ANSI 05.1), the concrete pole classifications developed in this specification generally follow the wood pole classification system. However, to avoid confusion with the wood pole classifications, the concrete pole classifications have a unique naming system.

Wood Pole Equivalency

In some cases, the owner may design a transmission line based on wood pole classifications as described in ANSI 05.1, Wood Pole Specifications and Dimensions, and then wish to order concrete poles which meet the wood pole equivalent loadings. Because of the differences in strength factors applied to wood poles in comparison to concrete poles, the owner must be sure that the strength factors are properly accounted for in the design of the concrete poles.

"Wood pole equivalent" is a term that may be defined in a number of ways. For purposes of this commentary, the term "wood pole equivalent" is defined as a standard class prestressed concrete pole which is equated by required ultimate loading to an ANSI 05.1 standard class wood pole. The equation is made by a ratio of the strength factors applicable for each pole type and loading criteria.

The design and purchase of concrete poles as an equivalent to wood poles can be vague even with clear instructions. As such, the owner should be sure that the equivalency is properly determined. Once the equivalency is determined, the owner should specify the standard class concrete pole based on the classifications detailed in Section 4.1.2. In doing this, the manufacturer will not be involved in the equivalency process and the ambiguity should be eliminated.

The wood pole equivalency is based on the required ultimate moment capacity of the pole at the groundline based on embedment depths shown in ANSI 05.1. In obtaining a suitable equivalency, the owner must consider factors other than the equivalent groundline moment. For example, the differences in material and section properties of the wood pole versus the concrete pole will result in differences in buckling analysis, pole deflections, secondary moments, applied wind forces, and so forth.

It is impossible to completely equate the concrete pole and wood pole at all points along the pole. The owner must be certain that the concrete pole selected by equivalency methods will have a strength sufficient for the actual application.

Equivalency Factor (Eq.F)

The equivalency factor (Eq.F) is defined as the ratio of the wood pole strength factor to the concrete pole strength factor for a given loading condition.

For example, for ***NESC Grade B district loading***, the wood pole strength factor is 0.65 and the concrete pole strength factor is 1.00. Thus, the equivalency factor will be 0.65/1.00 = 0.650.

The equivalency factor is a useful concept to understand as the owner requires a wood pole equivalent under various loading conditions and load factors. Several examples of equivalencies are listed in the following sections.

Wood Pole Equivalency – 0.65 TO 1.00 Ratio (0.65 Eq.F)

For the NESC Grade B district loadings, the NESC allows for a strength factor of 1.00 to be applied to a load on a concrete pole while it requires a strength factor of 0.65 to be applied to a load on a wood pole. As such, the ultimate strength requirement for the concrete pole will be less than the ultimate strength of the wood pole for the district loading conditions.

For example, the owner designs a transmission line for wood poles based on NESC district wind loading conditions. The owner wishes to purchase a concrete pole which is equivalent to a Class 1 wood pole. Based on ANSI 05.1, the Class 1 wood pole groundline strength is derived by applying a horizontal ultimate load of 4,500 pounds at 2' from the pole tip based on a simple cantilever. Since the owner had classed the wood pole based on an NESC strength factor of 0.65, the owner wishes to select a concrete pole meeting the same NESC district wind loading conditions. To do this, the owner will multiply the required tip loading of 4,500 pounds by 0.65/1.00, which equals 2,925 pounds. The 0.65/1.00 ratio (or 0.65 Eq.F) adjusts for the difference between wood and concrete strength factors for NESC district loads. The owner will then select a standard class concrete pole which has an ultimate moment capacity based on the horizontal tip loading of at least 2,925 pounds. From Section 4.1.2, the owner selects a class C-02.9 pole, which has a tip loading of 2,925 pounds.

Based on the method shown in this example, Table A-1 (at the end of this section) is a tabulation of wood pole equivalencies based on the NESC Grade B district loading.

Wood Pole Equivalency - 0.75 TO 1.00 Ratio (0.75 Eq.F)

For the NESC Grade B extreme wind loadings, this specification requires a strength factor of 1.00 to be applied to concrete poles for the transverse extreme wind load condition while the NESC requires a strength factor of 0.75 to be applied to a wood pole under the extreme wind load condition. As such, the initial ultimate strength requirement for the concrete pole will appear to be less than the ultimate strength of the wood pole for the NESC extreme wind loading conditions.

For example, the owner designs a transmission line for wood poles based on NESC extreme wind loading conditions. The owner wishes to purchase a concrete pole which is equivalent to a Class 1 wood pole. Based on ANSI 05.1, the Class 1 wood pole groundline strength is derived by applying a horizontal ultimate load of 4,500 pounds at 2' from the pole tip based on a simple cantilever. Since the owner had classed the wood pole based on an NESC extreme wind strength factor of 0.75, the owner wishes to select a concrete pole meeting the same extreme wind loading conditions. To do this, the owner will multiply the required tip loading of 4,500 pounds by 0.75/1.00, which equals 3,375 pounds. The 0.75/1.00 ratio (or 0.75 Eq.F) adjusts for the difference between wood and concrete extreme wind strength factors. The owner will then select a standard class

concrete pole which has an ultimate moment capacity based on the horizontal tip loading of at least 3,375 pounds. From Section 4.1.2, the owner selects a class C-03.5 pole, which has a tip loading of 3,510 pounds.

Based on the method shown in this example, Table A-2 at the end of this section is a tabulation of wood pole equivalencies based on the NESC Grade B extreme wind loading.

Wood Pole Equivalency – 1 TO 1 Ratio (1.0 Eq.F)

Occasionally, the owner may wish to order a concrete pole which has the same ultimate strength as a specified wood pole class. One common application of this is when the owner designs a transmission line using wood pole properties, but utilizing concrete pole strength factors. In this case, the owner has accounted for the difference in wood versus concrete strength factors during the design of the project.

For example, the owner designs a transmission line for wood poles based on NESC district wind loading conditions. However, knowing that concrete poles will be utilized, the owner uses the NESC district wind strength factor of 1.00 (applicable to concrete poles) in the calculations. The owner selects a wood pole Class 1 at a specific location. Thus, the owner wishes to purchase a concrete pole which is equivalent in ultimate strength to a Class 1 wood pole. Based on ANSI 05.1, the Class 1 wood pole groundline strength is derived by applying a horizontal ultimate load of 4,500 pounds at 2' from the pole tip based on a simple cantilever. Therefore, the owner will require a concrete pole with an ultimate moment capacity based on the same 4,500 pound tip loading. From Section 4.1.2, the owner selects a Class C-04.9 concrete pole, which has a tip loading of 4,875 pounds.

Based on the method shown in the this example, Table A-3 at the end of this section is a tabulation of wood pole equivalencies based on the ultimate-to-ultimate strength comparison, or 1.0 equivalency factor.

TABLE A-1
WOOD POLE EQUIVALENCY
BASED ON 0.65 TO 1.00 RATIO
(0.65 Equivalency Factor)
(NESC Grade B District Loading)
(Equivalencies based on approximate groundline strength)

Design Wood Pole Class Based On 0.65 Strength Factor		**Select** Concrete Pole Class Based On 1.00 Strength Factor
H6		C-07.4
H5		C-06.5
H4		C-05.7
H3		C-04.9
H2		C-04.2
H1		C-03.5
1		C-02.9
2		C-02.4
3		C-02.0

TABLE A-2
WOOD POLE EQUIVALENCY
BASED ON 0.75 TO 1.00 RATIO
(0.75 Equivalency Factor)
(NESC Grade B Extreme Loading)
(Equivalencies based on approximate groundline strength)

Design Wood Pole Class Based On 0.75 Strength Factor		**Select** Concrete Pole Class Based On 1.00 Strength Factor
H6		C-09.0
H5		C-08.0
H4		C-06.5
H3		C-05.7
H2		C-04.9
H1		C-04.2
1		C-03.5
2		C-02.9
3		C-02.4

TABLE A-3
WOOD POLE EQUIVALENCY
BASED ON 1 TO 1 RATIO
(1.0 Equivalency Factor)
(Ultimate-to-Ultimate Comparison)
(Equivalencies based on approximate groundline strength)

Design Wood Pole Class		**Select** Concrete Pole Class
H6		C-12.0
H5		C-10.0
H4		C-09.0
H3		C-08.0
H2		C-06.5
H1		C-05.7
1		C-04.9
2		C-04.2
3		C-03.5

Other Wood Pole Equivalencies

Using the wood pole equivalency methods described, the owner can develop equivalency tables for other ratios of wood versus concrete load factors.

2 Section 4. Design

Loads (Section 4.1)

The primary loads for concrete poles are weather and erection loads. Common handling loads are determined by the manufacturer and included in the manufacturer's design. Weather, construction and maintenance loads need to be determined by the owner in order to select the proper standard class pole.

Load factors for NESC light, medium, and heavy loading districts should be at least equal to those given in the applicable edition of NESC for Grade B construction. Load factors for extreme ice and extreme wind should be at least 1.1.

In addition to using the NESC district loading requirements, the ASCE publication, "Guidelines for Transmission Line Structure Loading" can be used to provide owners with procedures for the selection of design loads and load factors related to climate, accidents, construction, and maintenance.

Once the design loadings have been determined, a design of the structure should be performed by the owner's engineer or structural designer. It is recommended that a nonlinear structural analysis computer program be utilized to consider the loadings, secondary moments (p-delta effect), and effects of foundation rotations and deflections. As a minimum, an approximate method for determining the ultimate moment capacity should be utilized, such as the methods given in RUS Bulletin 1724E-200, *Design Manual for High Voltage Transmission Lines.*

Once the structural analysis has been completed, the owner's engineer or structural designer may select a standard class concrete pole which has the ultimate moment capacity greater than the design loading requirements. Consideration should be given for strength requirements at all points along the pole, not just at the groundline.

P-Delta Moment

Prior to selecting a standard class concrete pole, the owner should determine the effect of the secondary moments due to the vertical loadings, including the effect of the pole weight, during the transmission line design process.

Whenever there is a transverse or longitudinal load, the pole will deflect in the direction of the load. As a result, the vertical load is no longer in its original position. The vertical load moves over as the pole deflects, causing additional moments in the pole. Also, the pole weight can place significant secondary moment loads in the pole. The additional stress caused by this secondary moment is dependent on the magnitude of the vertical load and deflected shape of the pole. Many pole designs, particularly tall poles, have to be calculated for the position of equilibrium of forces in the fully displaced position. The solution typically takes many iterations. A full nonlinear analysis will consider the change in orientation of the loads relative to the displaced positions of the structural members.

As a minimum, an approximate method for determining the effect of the secondary moments should be utilized, such as the method given in the RUS Bulletin 1724E-200.

Pole Tip Strength (Section 4.1.2)

This specification sets minimum ultimate moment capacity requirements near the pole tip for each standard pole classification. The similar ANSI 05.1 requirement is generally overlooked, misunderstood or not considered by manufacturers and others who seek to standardize pole sizes based on the wood pole classification.

Upon a careful study of the ANSI 05.1 wood pole specification, one should understand that the horizontal loading applied at 2' from the pole tip is for the purpose of determining a required groundline ultimate moment capacity for any length pole of the given class. However, the minimum required wood pole tip size is specified apart from the horizontal loading requirement.

For example, according to ANSI O5.1, a Class 1 wood pole must have a circumference of 27" at the tip. When applied to the Douglas Fir or Southern Yellow Pine poles with a fiber stress of 8,000 psi, the resulting tip strength is calculated as 41.5 ft-kips for the Class 1 wood pole.

Because the conductors and shield wire supports are typically located on crossarms away from the pole axis, significant moments can be generated in the pole near the tip. The moments are greatly increased whenever a braced pole top assembly is utilized. These moments are not accounted for by applying the horizontal ultimate loading alone. Therefore, in the design of transmission poles, it is critical that a minimum ultimate moment capacity be specified near the pole tip. In the absence of a minimum tip strength requirement, a concrete pole tip strength can theoretically be negligible.

The minimum pole tip strength required by this specification should be suitable for most transmission line applications. However, the owner must be sure that the tip strength is properly evaluated, especially when working with wood pole equivalencies and braced structures.

Point of Fixity (Section 4.1.2)

Point of fixity for this specification is defined as the location on the pole where maximum moment occurs. Maximum moment is calculated by the pole designer using the loadings provided by the owner and multiplying those loadings by the appropriate moment arms. The existing soil and backfill has to be able to support the pole with these bending moments applied. The location of this point of fixity could be at or below the groundline. The exact location is theoretical and depends on the soil condition and backfill used to support the pole.

For the standard class pole, the point of fixity should remain at the same location on the pole, regardless of the embedment depth the owner may specify for a given application. Otherwise, the required pole strength could vary as the location of the point of fixity varies. Within the scope of this standard class pole specification, the point of fixity is arbitrarily considered to be located at a distance from the pole butt, which is equal to 7% of the pole length. This value seems to work quite well over a range of pole lengths and is approximately the same value as a point of fixity located at 1/3 of the distance below the groundline based on an embedment depth of 10% of the pole length + 2'.

The reinforcing steel required at the point of fixity is required to continue to the pole butt. However, due to the loss of prestressing steel strength near the pole butt, the ultimate moment capacity near the pole butt will be reduced.

Tip Loading (Section 4.1.2)

The tip loading is used to develop a required ultimate moment capacity diagram at any point along the pole from 2' below the pole tip down to the point-of-fixity. This ultimate moment capacity is determined by multiplying the tip load by the moment arm based on a simple cantilever. As a result, the required ultimate moment diagram is linear in shape. This same method may be utilized in structural analysis and automated transmission line

design computer programs to develop an array of ultimate moment requirements for standard concrete pole sizes.

Pole Deflection (Section 4.1.3 and 4.1.4)

Although significant horizontal pole deflection limitations are considered to be beyond the scope of this standard class concrete pole specification, some allowances can be made for these effects. They should be considered during the analysis of the actual loading conditions applied to the concrete pole. Typically, this type of analysis should be accomplished by nonlinear structural analysis techniques. Since the electrical clearances must be assured in the operation of transmission lines, deflections must remain within an acceptable range.

This specification limits the allowable pole deflection to 15% of the pole height above the point of fixity when the tip load specified in Section 4.1.2 is applied under a horizontal testing procedure under short term loading conditions. Long term loading will cause continued deflection due to the plastic deformation of the concrete.

The owner should recognize that the actual pole deflection for an application will be less than the specified deflection limit of 15% of the pole height. With the standard class pole, all of the loading is applied near the pole tip. In a typical transmission line application, the actual horizontal loading will be some distance from the pole tip. As such, the actual deflection at the conductor under short term ultimate loading conditions can be expected to be less than 10% of the height above ground.

This specification also limits the allowable pole deflection to 5% of the pole height above the point of fixity when 40% of the tip load specified in Section 4.1.2 is applied under a horizontal testing procedure under long term loading conditions. This 40% loading approximates the unfactored NESC loading conditions as is discussed in the commentary on cracking strength.

The NESC requires that electrical clearances be maintained under a wind loading of 6 psf. It is expected that the deflection of a standard class pole under this 6 psf loading condition will be less than 3% of the height above ground.

For situations where the owner wishes to know the deflection for a standard class pole, the owner should use a suitable structural analysis computer program in which the actual design loading conditions and concrete pole properties are input into the program. Another option would be to ask the pole manufacturer to provide the analysis.

If the owner has special deflection limitations, it is recommended that RUS Bulletin 1724E-206, *Guide Specification for Prestressed Concrete Pole and Concrete Pole Structures*, be utilized instead of this specification. In doing so, there will be little doubt as to what the actual pole deflections will be under all loading conditions.

Cracking Strength (Section 4.1.5)

Cracking strength is defined as the point at which the concrete just begins to separate due to exceeding the tensile strength of the concrete on the tension face of the pole.

To minimize the potential for corrosion of the reinforcing steel, it is desirable to avoid cracking under the unfactored NESC district loading conditions, or any other service loads specified by the owner. Under this standard class concrete pole specification, these service loads are not specified, but are considered to be 40% of the specified ultimate loads.

For concrete poles designed within the limits of this specification, the predominant pole loading will be transverse wind loads. The service load is determined based on the ratio of the transverse load factor. The NESC load factor applied to district wind loads is 2.5. As such, the service load will be equal to the ultimate load divided by 2.5, or 40% of the ultimate load.

For typical concrete pole designs, initial cracking occurs at about 40-55 percent of the ultimate strength of the pole. Therefore, the requirement for the cracking strength to be at least 40% of the required ultimate strength should not cause the pole to be stronger than when considering ultimate strength alone.

Since it may be theoretically possible to have a cracking strength at less than 40% of the ultimate strength, it is not desirable to do so. By requiring the cracking strength to exceed 40% of the required ultimate strength, the owner is assured of an adequate cracking strength for the standard class concrete pole.

Zero Tension Strength (Section 4.1.6)

The zero tension strength is defined as the moment at which a crack that was previously created by exceeding the cracking moment strength will open again. Under this condition, an applied moment will not cause any tensile stress in the concrete.

It is important to avoid open cracks in situations of significant unbalanced lateral loading and in extremely corrosive environments in order to protect the steel reinforcing. Typical structures with permanent unbalanced lateral loads are unguyed angle and unguyed deadend structures. While the design of these structure types is generally outside the recommended scope of this specification, this specification does require a minimum zero tension strength for all pole classes.

It has been demonstrated that the zero tension strength will typically be 70% to 85% of the cracking strength. With a minimum cracking strength of 40% of ultimate, 70% of this value would be equal to 28% of ultimate. Thus, it is natural for all concrete poles to have a zero tension strength of at least 28% of ultimate. As such, this specification requires the standard class concrete pole to have a zero tension strength exceeding 28% of the required ultimate strength.

For situations where the owner wishes to select a standard class pole based on a minimum zero tension strength, this specification may be utilized. A typical situation where the owner may wish to do this is when the owner uses a transmission line design computer program in which zero tension strength values are input for each pole type.

The owner should recognize that the zero tension strength for most concrete poles is greater than the minimum required strength of 28% of the ultimate strength. In fact, the zero tension strength can be as high as 50% of the ultimate strength. Thus, for concrete pole applications which must be designed for the zero tension strength requirements, such as unguyed or unbalanced lateral loadings, it is quite possible for the owner to obtain the concrete pole at a significantly lesser cost by submitting the actual loading conditions to the manufacturer using RUS Bulletin 1724E-206.

Foundation Rotation and Deflection

Although significant foundation rotation and deflection criteria are considered to be beyond the scope of this standard class concrete pole specification, some allowances can be made for these effects. They should be considered during the owner's analysis of the actual loading conditions to apply to the concrete pole. Typically, this type of analysis is accomplished by nonlinear structural analysis techniques.

Once the structural analysis has been completed (including foundation rotations and deflections, p-delta effect, etc.), the owner may select a standard class concrete pole which has the ultimate moment capacity greater than the design loading requirements.

Longitudinal Loads

It is recommended that RUS Bulletin 1724E-206 be utilized whenever the longitudinal loads may result in a significant unbalanced lateral loading condition. In this case, the design of the structure based on zero tension strength is emphasized. (Refer to the Commentary regarding Zero Tension Strength.)

Because concrete poles are flexible structures, there may be a reduction in induced moments in a pole under some types of longitudinal loads due to the restraining effect of the overhead ground wires. Traditionally, static longitudinal loads are specified due to the complexity of calculating the influence of structure flexibility.

Guy Wires

It is generally beyond the scope of this standard class concrete pole specification to consider guy wires in the design of the structure. It is recommended that RUS Bulletin 1724E-206 be utilized instead.

However, a typical situation where the owner may wish to use this specification for guyed poles is when the owner uses a transmission line design computer program, or other structural analysis program, in which minimum strength values are input for each pole type and the program is capable of combined bending and buckling analysis of guyed concrete poles.

It may also be possible to specify certain types of guyed concrete poles based on wood pole analysis techniques as detailed in RUS Bulletin 1724E-200. Once the wood pole class is determined, a standard class concrete pole could be selected based on an equivalency. In this case, it is recommended that the 1:1 equivalency ratio be utilized. It is generally agreed that a concrete pole has a greater buckling strength than an equivalently classed wood pole; therefore, the selected concrete pole class should be adequate for a situation in which a wood pole would normally be specified. The owner should use caution in using this equivalency method and its usage should be prudently influenced by the owner's experience in similar applications where actual design loadings were utilized under similar guying conditions.

Any time a concrete pole structure is guyed, the guy type, size, modulus of elasticity and guy slope or angle has to be determined by the owner and properly modeled in the analysis of the concrete structure. As is required by RUS Bulletin 1724E-206, the load in the guy wire should be limited to 65 percent of its ASTM rated breaking strength under actual ultimate loading conditions. The concrete pole and guy wire(s) must be designed as a system.
The guy modulus of elasticity can increase from a minimum value at the time of manufacture, to a maximum value, which results from periodic stretching and relaxing during the load cycles. Ranges from 19,000 ksi to 28,000 ksi have been stated. The ASCE steel pole specification (ASCE Manual 72) has suggested a guy wire modulus of elasticity of 23,000 ksi be used by the engineer whenever it is not specified.

Groundline

The location of the groundline for the standard class pole should be specified on the owner's drawings.

While the strength of the standard class pole is not effected by the groundline location, the proper placement of climbing devices, ground wire clips, cant hole, vent hole, name plate, and so forth, depends upon the location of the groundline.

In addition, the ultimate moment capacity at the groundline is to be noted on the manufacturer's drawings (see Section 7.2.5) and stamped on the pole name plate (see Section 4.12.1).

Air Entrainment in Concrete Poles (Section 4.2)

The general effects of air entrainment are to increase workability, decrease density (unit weight), decrease strength, reduce bleeding and segregation, and increase durability.

An air content of 5% plus or minus 1% is required by ASTM C935 for statically cast poles "unless otherwise specified". The owner should refer to ACI 318, Section 4.4 for concrete exposed to freezing and thawing. The required air content by ACI 318 will be a function of the exposure, the maximum aggregate size, and the specified compressive strength.

Air entrainment in spun concrete poles is similar to air entrainment in normal concrete except the fabrication processes of pumping, vibrating, and spinning causes a large percentage of the entrained air to migrate out of the concrete. For a spun concrete pole, the spinning process creates a very dense concrete and counteracts the air entrainment effects. Since pumping occurs prior to the pole being spun, the air entrainment effects are present during the fabrication of spun poles. The percentage of air entrained in a spun concrete pole after it is spun is unknown. However, it is believed poles that have concrete containing an air entrainment agent will have a higher void ratio than those without this agent. The owner has to be aware that as the percentage of air entrainment increases the concrete strength decreases.

Cross-Sectional Shape (Section 4.3)

Concrete poles can be manufactured in many different shapes, depending upon each manufacturer's equipment and capabilities. Some shapes are more conducive than others when it comes to bolt hole orientation and hardware fit.

For example, if the owner allows a square pole shape, it would be difficult to install through holes in a direction other than on the pole flats which are 90° apart. Even with holes installed out of the flat plane, the hardware fit would be cumbersome at best. Depending on the manufacturer and situation, some poles can be made with blockouts that create a type of flat over a short distance to allow the hardware to be properly attached. For 12-sided poles, the flats are 30° apart which lends itself to better hole orientation. Even with round cross-sections, there can be some deviation in the specified hole orientation due to longitudinal reinforcement placement.

Because of these issues, the owner should specify in the Application Requirements which pole shapes are acceptable for each structure. The owner should also specify the allowable angular tolerance on the hole orientation as this can significantly impact the manufacturing process and cost. For example, if a deadend structure is to be installed at a centerline survey line angle of 50°, is a hole orientation of 60° acceptable if that is at the center of a flat or between longitudinal stranding?

Grounding (Section 4.5)

The advantages of an external ground wire include the following: (1) it is visible and can be inspected, (2) hardware can be easily bonded and inspected, (3) it can be easily repaired or replaced, and (4) potentially offers the benefit of suffering less damage from lightning strike (particularly in areas with high isokeraunic levels). For these reasons, external ground wires are preferred in this specification.

If these specifications are altered to allow internal ground wires, then the following should be addressed adequately: (1) requiring grounding lugs at hardware attachments, (2) requiring grounding lugs at pole top and groundline (for external ground electrode), (3) considering the possibility of damage from lightning strike, and (4) considering grounding requirements for maintenance workers.

All internal reinforcing should be bonded electrically to the external pole ground wire. This will keep the external ground and internal reinforcing potential voltage differences lower during lightning events. There have been reports of step lugs and other materials embedded in the concrete, near or in contact with the reinforcing, being dislodged as a result of lightning. Spliced poles should have reinforcing on each side of the splice bonded electrically to the external pole ground wire. This should lower potential voltage differences of embedded material between each pole section.

3 **Structure Testing** (Section 5.4)

An option is available in the specification for full scale testing of poles. For a manufacturer, which has been designing and fabricating concrete poles with the same processes for a good number of years, the need for testing of a concrete pole is questionable. Pole testing may be appropriate in cases where there are unusual requirements, new fabrication techniques or when new suppliers are used to validate their design.

4 **Drawings and Information to be Supplied by the Manufacturer** (Section 7)

In order to properly evaluate bids, the specification requires certain information to be supplied with the bid. This information may be supplied on the preliminary drawings from the Bidder. Using the forms in Attachment C will allow quick review of the information and simultaneous comparison of all bidders' information.

BLANK PAGE

APPENDIX B

EXAMPLES OF DRAWINGS

(Attachment A of the Specification)

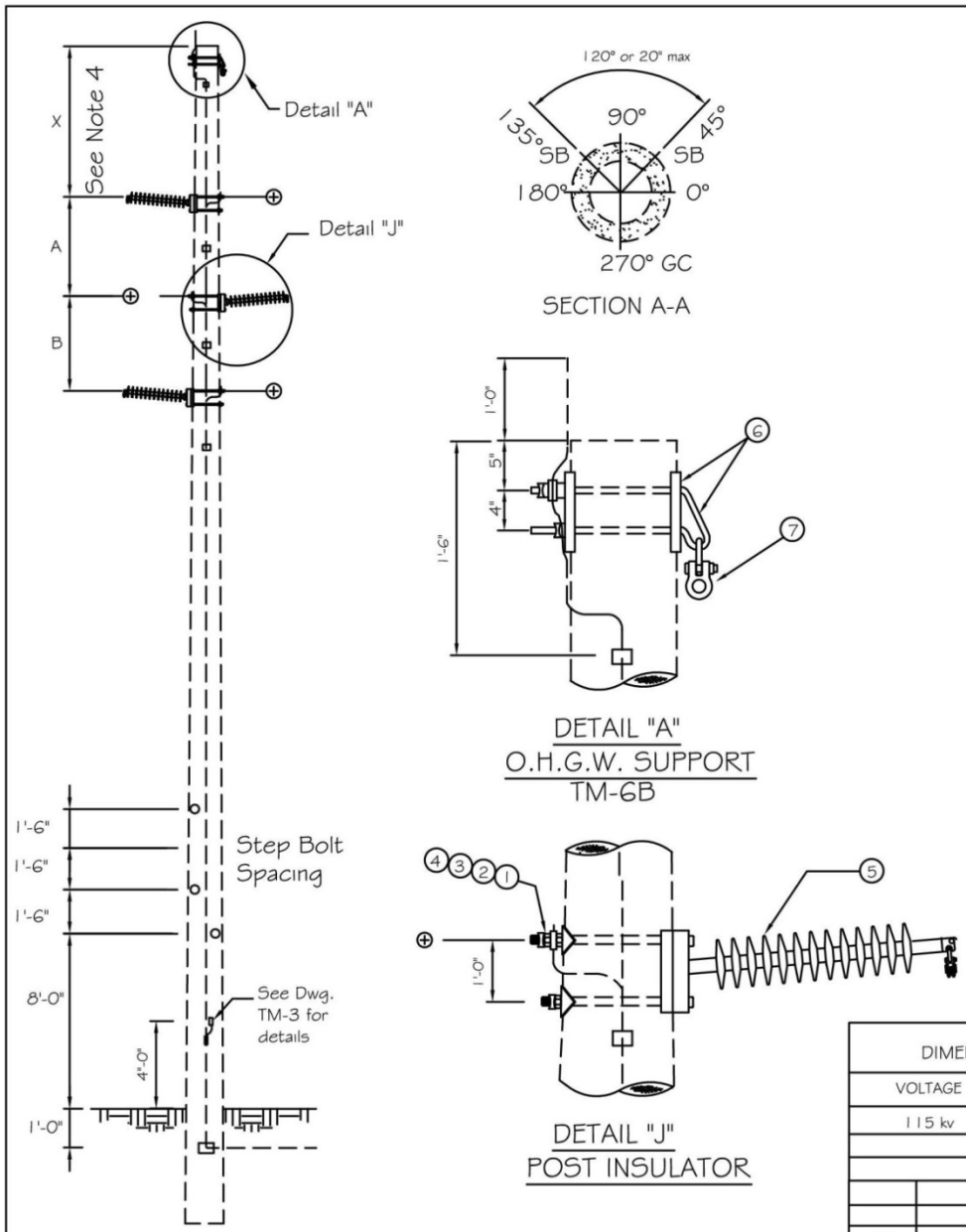

LIST OF MATERIALS

DWG. REF.	QTY.	DESCRIPTION	ITEM	DET.	CODE No.
1	6	7/8" Bolt, Machine, by req'd length	c		
2	6	Washer,Curved, 4"sq x 1/4",15/16 hole	d		
3	3	7/8" Clamp, Groundwire + 1 nut	dp		
4	6	7/8" Locknut, MF type	ek		
5	3	Insulator, Line Post, Polymer w/clamp		TM-3P	
6	1	OHGW SUPPORT ASSEMBLY	-	TM-6B	
7	1	OHGW ASSEMBLY, TANGENT	-	TM-4	

NOTES:

1. Pole manufacturer shall provide the threaded inserts and groundwire clips. Insert orientation for ground wire clips is indicated as "GC" in Section A-A. Groundwire clips begin 1'-6" below pole top and continue on a 5-ft. spacing to 1ft below ground line. Refer to the POLE FRAMING drawing.
2. Orientation of step bolts is indicated as "SB" on Section A-A.
3. Groundwire shall be continuous from pole to ground rod connection. Approximately 5 ft. of ground wire shall be provided from the pole to ground rod. See POLE GROUNDING ASSEMBLY drawing.
4. "X" shall be determinded as follows:

   Less than 100 feet -- 8.5 ft
   100 to 110 feet -- 12 ft

5. Engineer to specify groundline location and embedment depths on the POLE FRAMING drawing.
6. The following materials are to be specified on the plan and profile drawings and staking sheets: POLES, POLE GROUNDING ASSEMBLY, and ANY ADDITIONAL GROUNDING or FOUNDATION UNITS.

INFORMATION FOR POLE MANUFACTURERS

DIMENSION A & B		
VOLTAGE	A	B
115 kv	8'-0"	8'-0"

NO.	REVISION	DATE

TRANSMISSION LINE STRUCTURE

TANGENT HORIZONTAL LINE POST

Mar., 2000

TPC-115

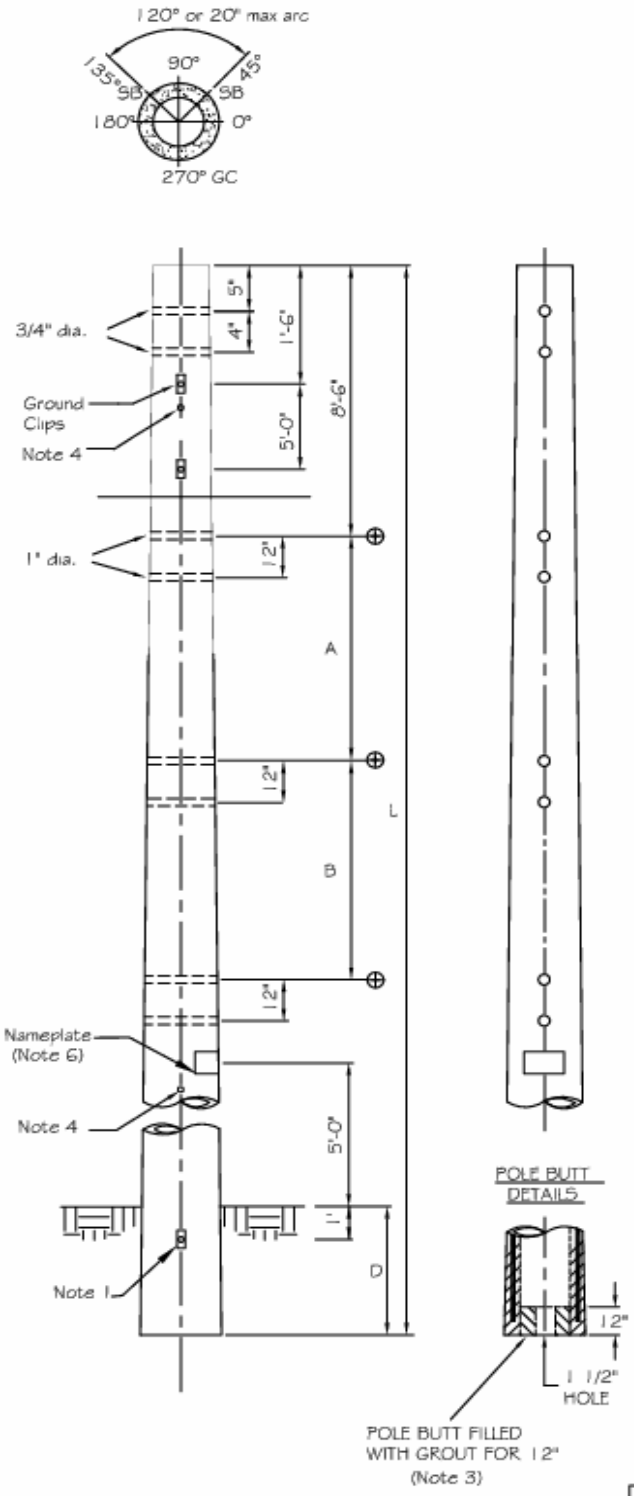

NOTES:

1. Provide 3/4"x7 1/2" galvanized stepbolts with locknuts at 1'-6" staggered spacing from 8' above designated groundline to 2' below poletop. Step bolts orientation is indicated as 'SB' in top veiw.

2. Provide groundwire clip at 1'-6" below pole top and continue on a 5' spacing to one foot below ground line. Orientation of clip is indicated as 'GC' in top view.

3. Pole shall have a concrete cap with dome top. Pole butt shall be plugged with 12" grout plug. Provide a 1-1/2" diameter drain hole in the plug.

4. Provide ground inserts for 1/2"-13 tank ground with No. 6 copper wire securely bonded to at least one continous steel tendon. Ground inserts shall be along the same axis and on the same side of the pole as the ground clips. The inserts shall be 12" to 24" below pole top and 4' above the groundline.

5. Tolerances:
   Pole length ±2"
   Pole weight ±10% of calculated weight

6. Nameplate shall be located as shown with the minimum information:
   Manufacturer's name
   Day, month and year of manufacture
   Structure number
   Length and class of pole
   Ultimate Groundline Moment (GLM)
   Pole framing designation
   Owner

7. Dimension "D" from pole butt to designated groundline is given below:

L	70'	75'	80'	85'	90'	95	100'
D	----------To be specified by the engineer----------						

8. Dimensions "A" and "B" are as follows:
   A = 8'-0"
   B = 8'-0"

9. See TM-C3 for step bolt details, grounding clip details, through bolt details, and steel bonding details.

10. Mounting holes for insulator located on 0-180° line.

11. Vent hole shall be located top and bottom as necessary.

TRANSMISSION POLES

TPC-115 POLE FRAMING DRAWING
(Concrete)

NO.	REVISION	DATE	Mar., 2000	TPFC-115

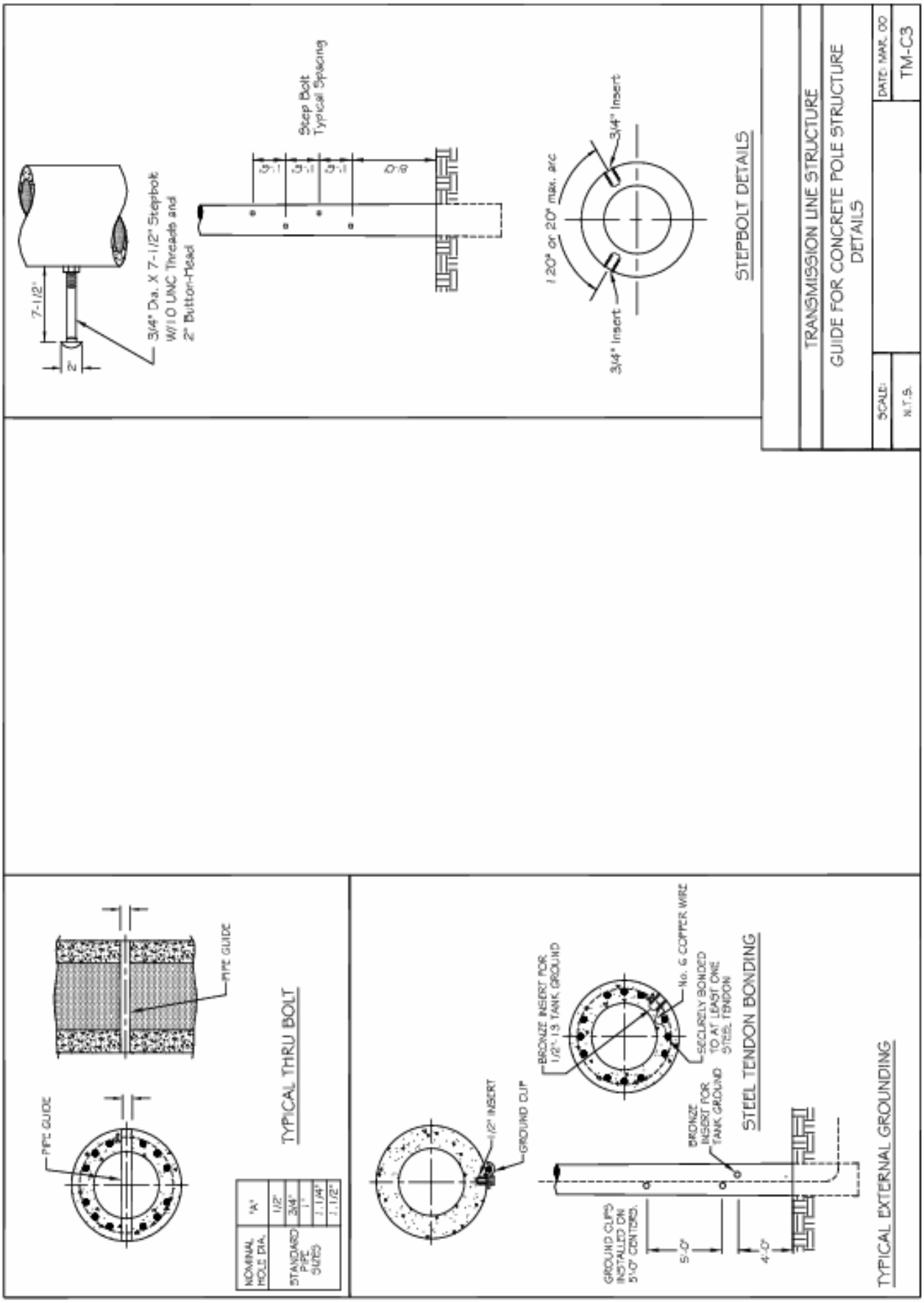
7-1/2"
2"
3/4" Dia. X 7-1/2" Stepbolt
W/10 UNC Threads and
2" Button-Head
Step Bolt
Typical Spacing
1'-0"
1'-0"
1'-0"

EXAMPLE OF APPLICATION REQUIREMENTS
Attachment B of the Specifications

For appurtenance material supplied by the owner, owner shall provide manufacturer, connector, and/or member locations, orientations, sizes, types, and strength capacities with this Attachment.

1. Climbing device desired by owner **STEP BOLTS**

2. Delivery schedule **JAN. 15, 2016**

3. Free on board destination (F.O.B.) **LEE'S LANDING, FL LAYDOWN AREA NEAR PEJMAN SUBSTATION**

4. Additional requirements

BLANK PAGE

APPENDIX C

DESIGN EXAMPLES

<u>Example 1</u>: For the TUC-1 concrete pole structure and loading conditions given below, determine the standard class concrete pole:

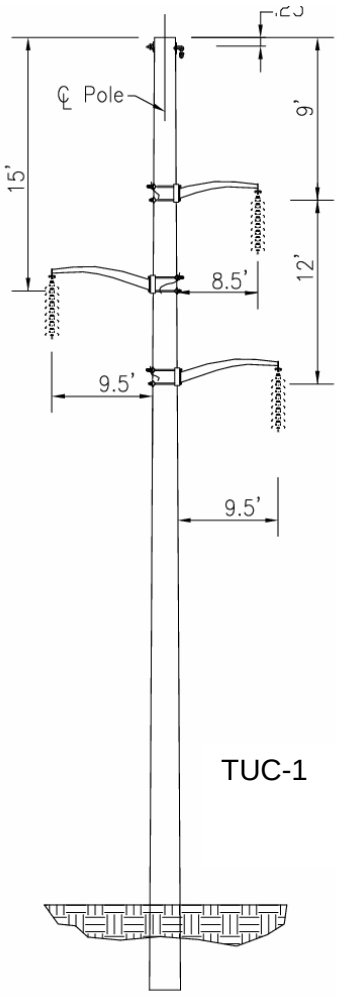

<u>General information</u>:

Line voltage:	161 kV
Design by:	ACME Engineers
Structure type:	TUC-1 Concrete Pole Structure (concrete pole with upswept arms)

<u>Geometry of the structure and location of loads</u>:

	Distance from Pole Top, Ft.
OHGW	0.25
COND-1	9.00
COND-2	15.00
COND-3	21.00
At Gd. Line-assumed	70.00
Pole-End	80.00
Crossarm Dimensions:	
Top arm	8.5 ft
Middle arm	9.5 ft
Bottom arm	9.5 ft

Overall pole length is 80 feet. The above dimensions assume a 10.0 foot embedment depth for the concrete pole (using standard rule for wood pole of 10 percent pole length plus 2 feet). Assume top of the pole has a 10 inch diameter, and the groundline diameter is 20 inches.

<u>Load Factors (LFs) used in this example</u>:

For NESC Light, Medium, or Heavy Loading District Loads

Vertical Loads	1.50
Transverse. Wind Loads	2.50
Transverse. Wire Tension Load at Line Angle	1.65
Longitudinal Loads	1.10
Extreme Wind Loads	1.10
Extreme Ice with Concurrent Wind Loads	1.10

<u>Conductor and OHGW Data</u>:

OHGW:	3/8"HSS R.B.S = 10,800 lbs
161 kV Conductor:	Drake (795 26/7 ACSR) R.B.S = 31,500 lbs

<u>Design Span Information:</u>

Vertical Span	900 ft.
Horizontal Span	750 ft.
Line Angle	0 degrees

Load Cases:

Load Case A: NESC Medium District Loads

Load Case B: 90 mph Extreme Wind Load (1.1 LF applied)

Load Case C: 30 mph with 1 inch ice load (1.1 LF applied)

Loading Information (summary):

NESC Medium Loading Data

		Transverse	Vertical
	Cond. Tension (kips)	lb./ft.	lb./ft.
Drake –795 26/7 ACSR	7.91	.5360	1.5162
OHGW – 3/8 HSS	2.56	.2867	.4626

Extreme Wind Loading Data (90 mph)

		Transverse	Vertical
	Cond. Tension (kips)	lb./ft.	lb./ft.
Drake –795 26/7 ACSR	6.54	1.9390	1.0940
OHGW – 3/8 HSS	1.23	.6210	.2730

Extreme Wind with Concurrent Ice (30 mph wind and 1” ice)

		Transverse	Vertical
	Cond. Tension (kips)	lb./ft.	lb./ft.
Drake –795 26/7 ACSR	12.54	.5967	3.7154
OHGW – 3/8 HSS	5.27	.4532	1.9642

Calculate forces and moments at the groundline:
(assumes no pole rotation)

- **NESC Medium District Loading**

	Load Due to Wind on Wire kips	Load Due to Line Angle (kips)	Total Transverse Load W/LF (kips)	Moment Arm Feet	Ultimate Moments Ft. kips @ Groundline
OHGW	.215	0	.538	69.75	37.5
COND-1	.402	0	1.005	61.00	61.3
COND-2	.402	0	1.005	55.00	55.3
COND-3	.402	0	1.005	49.00	49.2
Groundline				0.0	

Total Shear Loads for Wire Loads	3.57		203.4
Wind on the Pole	0.88		27.2
Moments due to unbalanced vertical Wire Load (8.5 ft arm or 9 ft from conductor attachment to center of pole)			18.9
Moment due to deflection for weight of pole and for wires (p-delta moment) Approximated, based on 15 percent of the static moment from wire loads, i.e. M=.15x203.4 ft kips)			30.5
Total Transverse Shear @ Groundline	4.45		--
Total Moments @ Groundline	--		279.9

TOTAL GROUNDLINE MOMENT FOR MEDIUM LOADING DISTRICT = 279.9 ft.-kips

- **Extreme Wind Load and Extreme Ice with Concurrent Wind Load**

  Similar calculations are performed for the extreme wind load and extreme ice with concurrent wind loads:

  TOTAL GROUND LINE MOMENT FOR THE EXTREME WIND LOAD = 418 ft-kips
  TOTAL GROUNDLINE MOMENTS FOR EXTREME ICE WITH CONCURRENT WIND LOADS…….= 165.ft-kips

- **Conclusions**: The Extreme Wind Loading Case controls design.

Determine which "standardized" concrete pole design to use:

Distance 2' from top to groundline = 70' – 2.0' = 68'

Load 2' from the top to
cause a 332 ft.-kip moment at groundline: = 417 ft-kips/68' = 6140 lbs.

Based on the above calculated tip load and from **Table 1 of the specification**, use a **C-06.5 pole**

Perform a quick check to verify the assumed embedment depth using RUS Bulletin 1724E-205, "Design Guide: Embedment Depths for Concrete and Steel Poles".

Discussion:
Based on the results above, the extreme wind load case controls the design. Results from a computer program which uses finite element analysis are summarized in the table below. The results compare manual linear calculations with an estimate of secondary moments to the results from a computer program which performs a nonlinear analysis.

The NESC allows the use of span factors and height adjustment factors when considering extreme wind loads (refer to RUS Bulletin 1724E-200, Design Manual for High Voltage Transmission Lines, Chapter 11). From the summary below, several conclusions can be made. The results from manual calculations and the computer analysis using finite elements are close, the major difference occurring with the estimate of secondary moments in the manual calculations. Also, the use of span factors and height adjustment factors will impact the design reactions. When using span factors and height adjustment factors, the selected 'standardized' concrete pole would be:

Load 2 ft from the top to cause a 334. ft kip moment (nonlinear analysis and span and height adjustment factors) = 4930 lbs

Based on the above calculated tip load and from **Table 1 of the specification**, use a **C-05.7 pole**

Load Case	Groundline Moments based on manual calculations with an estimate of the secondary moments (15% of static moment)	Groundline Moments based on a nonlinear analysis	Groundline Moments based on a nonlinear analysis and using span and height adjustment factors
Load Case A NESC Medium Loading	**279**	**276**	**N.A.**
Load Case B Extreme Wind Load	**417**	**401**	**334**
Load Case C **Extreme Ice with Concurrent Wind**	**163**	**176**	**N.A.**

In this example, if span factors and height adjustment factors are applied in calculating the unit loads, the standard size class concrete pole will be reduced by one class.

Example 2: **An existing 161 kV single pole line is composed of Douglas Fir wood poles. In several locations, concrete poles are to replace wood pecker damaged wood poles. The existing damaged poles are 80 ft class 1 wood poles with the TUS pole top assembly. Determine which standard size concrete pole should be used to replace the wood pole. Extreme wind design load is 20.7 psf (90 mph). The line is located in the heavy loading district. The conductor is 795 ACSR Drake and the overhead groundwire is 3/8" HSS.**

NESC heavy district loads with a strength factor of .65 and a load factor of 2.5 controlled the design of the original wood pole line. However, a quick comparison of the unit loads for the extreme wind and the NESC heavy district load with load factors and strength factors for concrete, indicates that the extreme wind load will control the design of the concrete pole.[1] Because the extreme wind case controls design of the concrete replacement pole, the engineer may use Table A-2 for convenience.

Table A-2 indicates that for a class 1 wood pole, a C03.5 may be used. There may be other issues in matching classes of wood poles to concrete poles that the engineer may need to consider. This example, however, shows the importance of determining the loading condition that controls the design of the concrete pole. If the engineer had assumed that the NESC heavy district load controlled design of the concrete pole replacement since it controlled the design of the wood pole when initially installed, then Table A-1 would have been mistakenly used and a S02.9 would have been selected as the replacement pole.

Note 1: Unit loads for extreme wind is 1.9113 lbs/ft, or 2.102 with a 1.1 LF and for the NESC heavy district load, the unit load is 1.7567 lbs/ft with a 2.5 LF.

APPENDIX D

SELECTED SI METRIC CONVERSIONS

Selected SI-Metric Conversions

AREA

To Convert From	To	Multiply By
circular mil (cmil)	square meter (m^2)	5.067075 E-10
square centimeter (cm^2)	square meter (m^2)	*1.000 E-04
square foot (ft^2)	square meter (m^2)	*9.290304 E-02
square inch (in^2)	square meter (m^2)	*6.451600 E-04
square kilometer (km^2)	square meter (m^2)	*1.000 E+06
square mile (mi^2)	square meter (m^2)	2.589988 E+06

FORCE

To Convert From	To	Multiply By
kilogram force (kgf)	Newton (N)	*9.806650
kip	Newton (N)	4.448222 E+03
pound force (lbf)	Newton (N)	4.44822

FORCE PER LENGTH

To Convert From	To	Multiply By
kilogram force per meter (kgf/m)	Newton per meter (N/m)	*9.806650
pound per foot(lb/ft)	Newton per meter (N/m)	1.459390 E+01

DENSITY

To Convert From	To	Multiply By
pound per cubic inch (lb/in^3)	kilogram per cubic meter (kg/m^3)	2.767990 E+04
pound per cubic foot (lb/ft^3)	kilogram per cubic	1.601846 E+01

LENGTH

To Convert From	To	Multiply By
foot (ft)	meter (m)	3.048 E-01
inch (in)	meter (m)	*2.540 E-02
kilometer (km)	meter (m)	*1.000 E+03
mile (mi)	meter (m)	*1.609344 E+03

*Exact Conversion

Selected SI-Metric Conversions, Cont.

LOAD CONCENTRATION

To Convert From	To	Multiply By
pound per square inch (lb/in^2)	kilograms per square meter (kg/m^2)	7.030696 E+02
pound per square foot (lb/ft^2)	kilograms per square meter (kg/m^2)	4.788026
ton per square foot (ton/ft^2)	kilograms per square meter (kg/m^2)	9.071847 E+02

PRESSURE

To Convert From	To	Multiply By
kip per square inch (kip/in^2)	Pascal (Pa)	6.894757 E+06
kip per square foot (kip/ft^2)	Pascal (Pa)	4.788026 E+04
Newton per square meter (N/m^2)	Pascal (Pa)	*1.000
pound per square foot (lb/ft^2)	Pascal (Pa)	4.788026 E+01
pound per square inch (lb/in^2)	Pascal (Pa)	6.894757 E+03

BENDING MOMENT

To Convert From	To	Multiply By
kilogram force meter (kgf-m)	Newton meter (N-m)	*9.806650
kip-foot (kip-ft)	Newton meter (N-m)	1.355818 E+02
pound-foot (lb-ft)	Newton meter (N-m)	1.355818

VELOCITY

To Convert From	To	Multiply By
foot per second(ft/s)	meter per second (m/s)	*3.048 E-01
kilometer per hour (km/h)	meter per second (m/s)	2.777778 E-01
mile per hour(mi/h)	meter per second (m/s)	4.437030 E-01
meter per hour(m/h)	meter per second (m/s)	2.777778 E-04

*Exact Conversion.