UNITED STATES DEPARTMENT OF AGRICULTURE
Rural Electrification Administration

BULLETIN 1726A-125

SUBJECT: **Joint Use Agreement With CATV Companies**

TO: REA Electric Borrowers and REA Electric Staff

EFFECTIVE DATE: Date of Approval

EXPIRATION DATE: Seven years from effective date

OFFICE OF PRIMARY INTEREST: Distribution Branch, Electric Staff Division

FILING INSTRUCTIONS: This is a new bulletin. File along with 7 CFR 1726 in the blue binders.

PURPOSE: The purpose of this bulletin is to (1) furnish REA borrowers with a sample joint use agreement with CATV companies, (2) provide borrowers with guidance in executing such an agreement, and (3) provide borrowers with guidelines regarding construction practices on joint use poles.

Administrator

9/17/93
Date

TABLE OF CONTENTS

1. Introduction
2. Purpose
3. Application
4. Execution

APPENDIX: License Agreement

INDEX: Joint Use Agreement With CATV Companies

ABBREVIATIONS

CATV	Cable Television (Company)
NESC	National Electrical Safety Code (Accredited Standards Committee C2)

1. Introduction: A sample agreement for the joint use of poles, between REA borrowers and cable television companies, has been developed. A copy of this agreement, titled "License Agreement," is attached as an Appendix and a part of this bulletin.

2. Purpose: The purpose of this bulletin is to (1) furnish REA borrowers with a sample joint use agreement with CATV companies for the joint use of poles, (2) provide borrowers with guidance in executing such an agreement, and (3) provide borrowers with guidelines for construction and other related practices regarding joint use poles.

3. Application: The attached "License Agreement" is provided as a sample agreement which complies with all of the current, applicable REA requirements and recommendations.

3.1 The requirements for conformance to the NESC and other codes and regulations in Section 2, "Specifications," of the attached "License Agreement," are currently REA requirements and should remain essentially unchanged in the final executed agreement. The remaining provisions of the attached agreement clearly define and document good construction, maintenance, notification, and billing practices. Therefore, REA recommends, but does not require, that each one of these provisions be discussed and agreed upon by the parties, executed and enforced.

4. Execution: REA borrowers may execute the attached agreement without modifications, by filling in the appropriate information and securing the proper signatures. Alternately, the borrowers may modify the sample agreement as may be appropriate or required before signing. In either event, before executing the agreement, the borrower is advised to compare its provisions with the current requirements and guidelines of: (1) REA; (2) national, state, and local governing authorities having jurisdiction over contractual agreements and construction practices of the parties of the agreement; and (3) applicable national, state, and local safety and construction codes. The borrower is advised to have the agreement reviewed by a corporate attorney for form and content before execution.

LICENSE AGREEMENT
(SAMPLE FORMAT)

THIS AGREEMENT made and entered into the _____ day of _____, 19___, by and between _____ a(n) _____ corporation, with its principal place of business in _____ (hereinafter called "Licensor"), and _____ _____ a(n) _____ corporation, with its principal place of business in _____ _____ (hereinafter called "Licensee").

WITNESSETH:

WHEREAS, Licensor owns, operates and maintains lines of poles extending in _____ County(s), _____; and

WHEREAS, Licensee desires to place certain lines, attachments and apparatus on certain poles of Licensor, for the limited purpose of the transmission of signals in compliance with any and all local, state or federal regulations; provided, that such transmission of signals does not interfere or compete with the corporate purposes of Licensor or interfere with the furnishing of electrical service to consumers of Licensor, and where in its judgement, safety will not be adversely affected.

WHEREAS, Licensor is willing to permit Licensee, to the extent it may lawfully do so, to place said lines, attachments, and apparatus on said poles in the area shown on Exhibit "A" set forth below:

NOW, THEREFORE, in consideration of the premises and the mutual covenants herein contained, the parties hereto, for themselves, their successors and assigns, do hereby covenant and agree as follows:

1. DEFINITIONS

(a) For the purpose of this agreement, the phrase "joint use pole" shall mean a pole conforming to the latest specifications of the American Standards Association.

(b) A "pole contact" is defined as any attachment by Licensee, to the poles of Licensor.

2. SPECIFICATIONS

(a) The joint use poles covered by this agreement shall be placed and maintained in accordance with the <u>most stringent</u> requirements, specifications, rules, and regulation of the latest edition of the National Electrical Safety Code (NESC), the Occupational Safety and Health Act (OSHA), the Rural Electrification Administration (REA), any governing authority having jurisdiction, and the rules and practices of Licensor as set forth in Exhibit"B".

(b) It is understood and agreed between the parties that the rules and practices set out in Exhibit "B" may be changed by Licensor, or new rules and practices may be adopted by Licensor, without resort to the provisions of Section 15, relating to supplementing or amending this agreement, and Licensee agrees to be bound by any such change or adoption.

(c) In the event that Licensor should change or adopt a rule or practice, or rules and practices, for the joint use of poles by Licensee, Licensor shall give Licensee written notice of such change or adoption in the manner contemplated by Section 18 and Licensee agrees to make such changes or alterations in its installations or maintenance of its facilities as may be required in order to fully comply with the provisions of such notice. In the absence of a contrary provision in said notice, Licensee agrees to make all required changes or alterations within thirty (30) days after receipt.

(d) No tag, brand, or other device showing Licensee's name or insignia shall be placed on, or attached to, any pole of Licensor, except such tag or insignia which shows Licensee to be the Licensee or lessee of such pole and not the owner thereof, and then only after obtaining the written consent of Licensor.

(e) The strength of poles covered by this Agreement shall be sufficient to withstand the transverse and vertical loads imposed upon them under the storm loadings of the National Electrical Safety Code assumed for the area in which they are located.

(f) Any unbalanced loading of Licensor's poles caused by the placement of Licensee's circuits shall be properly guyed and anchored by Licensee, at no expense to Licensor.

3. ESTABLISHING JOINT USE OF POLES

(a) Before the Licensee shall make use of any of the Licensor's poles under this Agreement, it shall request permission in writing on the application form attached and identified as Exhibit C, and shall comply with the procedures set forth in this section.

(b) If, in the judgement of the Licensor, joint use under the circumstances is undesirable, the Licensor shall have the right to reject the application. In any event, within thirty (30) days after the receipt of such application the Licensor shall notify the Licensee in writing whether the application is approved or rejected.

(c) After receipt of notice from the Licensor regarding the approved application, the Licensee shall furnish the Licensor detailed construction plans and drawings for each pole line, together with necessary maps, indicating specifically the poles of the Licensor to be used jointly, the number and character of the attachments to be placed on such poles, any rearrangement of the Licensor's fixtures and equipment necessary for joint use, any relocations or replacements of existing poles, and any additional poles which may be required. The Licensor shall, on the basis of such detailed construction plans and drawings, submit to the Licensee within thirty days a cost estimate (based on Licensor's method of computing costs) for all changes which may be required in each such pole line, including an estimated completion date for such changes. Upon written notice by the Licensee to the Licensor of the cost estimate being approved, the Licensor shall proceed with the necessary changes in the pole line covered by the referenced cost estimate. The Licensor shall make every effort to complete this work at a mutually agreed upon completion date. Nothing shall preclude the parties from making any mutually agreeable arrangement for contracting for or otherwise accomplishing the necessary changes. Upon completion of all changes, the Licensee shall have the right to use the poles jointly and to make attachments in accordance with the terms of the application and of this Agreement. The Licensee shall, at its own expense, make attachments in such manner as not to interfere with the service of the Licensor, and shall place guys and anchors to sustain any unbalanced loads caused by its attachments.

(d) Upon completion of all changes in each pole line to be used jointly, the Licensee shall pay to the Licensor the cost of making such changes. The obligations of the Licensee shall not be limited to amounts shown on estimates made by the Licensor. Costs include materials less salvage, labor, engineering, supervision, overheads, and tree trimming. (Engineering includes design, proper conductor spacing and bonding, and calculations to determine proper ground clearances and pole and downguy strength requirements for horizontal and transverse loading.) An itemized statement of the actual costs of all such changes shall be submitted by the Licensor to the Licensee, in a form mutually agreed upon.

(e) Any reclearing of existing right-of-way, and any tree trimming necessary for the establishment of joint use, shall be performed by the parties as may be mutually agreed. Each party shall bear 50% of the cost of any such right-of-way reclearing and trimming.

(f) All poles jointly used under this Agreement shall remain the property of the Licensor, and any payments made by the Licensee for changes in pole lines under this Agreement shall not entitle the Licensee to ownership of any of said poles.

(g) The Licensor reserves the right to exclude any of its facilities from joint use.

4. EASEMENTS AND RIGHT-OF-WAY FOR LICENSEE'S ATTACHMENTS

The Licensor does not warrant or assure to the Licensee any right-of-way privilege or easements; and if the Licensee shall at any time be prevented from placing or maintaining its attachments on the Licensor's poles, no liability shall attach to the Licensor. Each party shall be responsible for obtaining its own easements and right-of-way.

5. MAINTENANCE OF POLES, ATTACHMENTS AND RIGHT-OF-WAY

(a) The Licensor shall, at its own expense, inspect and maintain the poles in accordance with industry practices and the specifications mentioned in Section 2, and shall replace, reinforce or repair such poles as are determined to be defective.

(b) Whenever right-of-way considerations or public regulations make relocation of a pole necessary, such relocation shall be made by the Licensor at its own expense, except each party shall bear the cost of transferring its own attachments.

(c) Whenever it is necessary to replace or relocate a jointly used pole, the Licensor shall, before making such replacement or relocation, give twenty (20) days notice in writing (except in case of emergency, when verbal notice will be given and subsequently confirmed in writing) to the Licensee, specifying in such notice the time of such proposed replacement or relocation. Licensee shall, at the time so specified, transfer its attachments to the new or relocated joint pole. Should the Licensee fail to transfer its attachments to the new or relocated joint pole at the time specified for such transfer of attachments, the Licensor may elect to do such work, and the Licensee shall pay the Licensor the cost. In the event the Licensee fails to transfer its attachments and the Licensor does such work, the Licensor shall not be liable for any loss or damage to the Licensee's facilities which may result.

(d) Except as otherwise provided in (c) of this Section, each party shall at all times maintain all of its attachments in accordance with the specifications mentioned in Section 2 and shall keep them in thorough repair. All necessary right-of-way maintenance, including tree trimming or cutting, shall be performed by the parties as may be mutually agreed upon, and the cost shall be borne by the parties as provided in Section 3(e).

(e) Any existing joint use construction of the parties which does not conform to the specifications mentioned in Section 2 shall be brought into conformity as soon as practicable. When such existing construction shall have been brought into conformity with said specifications, it shall at all times thereafter be maintained as provided in (a) and (d) of this Section. Should the Licensee fail to comply, the Licensor may elect to do such work and the Licensee shall pay the Licensor the cost.

(f) Licensee expressly assumes responsibility for determining the condition of all poles to be climbed by its employees, contractors, or employees of contractors. Licensor disclaims any warranty or representation regarding the condition and safety of the poles of the Licensor. Licensor agrees that, upon written notification, it will replace any pole that has become unserviceable.

6. RECOVERY, REARRANGING OR RELOCATION OF FACILITIES

(a) In the event it is necessary for Licensor, or for another regulated utility with whom Licensor has an agreement for the joint use of wood poles, or for another Licensee with whom Licensor has a prior agreement for the joint use of wood poles, to use the space on poles occupied, or contracted for, by the Licensee, the Licensee shall, upon receipt of a thirty (30) day written notice, either vacate the space by the removal of its attachments or shall authorize Licensor to replace the poles at the expense of Licensee and Licensee shall pay for said replacements as provided for in 6(b), provided, however, that Licensee has not paid for the replacement of such poles.

(b) In any case where facilities of Licensor are required to be rearranged on the poles of the Licensor or of others to accommodate the attachments of Licensee, Licensee shall pay to Licensor the total costs incurred by Licensor in rearranging such facilities. The Licensee shall also reimburse other users of the poles of Licensor for their costs of rearrangement to provide space or clearance for the facilities of Licensee.

(c) Whenever it is necessary to replace or change the location of a joint use pole, for reasons other than those set out in 6(a) and (b), and over which Licensee has no control, Licensor shall, before making such change, give due notice to the Licensee, specifying in such notice the time of such proposed change, and the Licensee shall promptly begin to transfer or remove its attachments. In case of any such pole replacement or relocation where Licensor has transferred or removed its attachments and Licensee has not transferred or removed its attachments within sixty (60) days after receipt of such written notice, Licensee shall become liable for such old pole as provided in Section 8 (a).

(d) In the event of any changes contemplated under 6 (a), (b) or (c), Licensee shall pay the entire cost of any removal, transfer or installation of its own attachments.

7. INDEMNIFICATION

Licensee shall indemnify, protect, save harmless and insure Licensor from and against any and all claims and demands for damages to property, and for injury or death to persons, including payments made under any Workers' Compensation Law or under any plan for employees' disability and death benefits, and including all expenses incurred in defending against any such claims or demands, which may arise out of or be caused by the erection, maintenance, presence, use, rearrangement or removal of the attachments of Licensee's equipment to Licensor's poles or by the proximity of the Licensee's cables, wires, apparatus and appliances to those of Licensor or by any act of Licensee, its agents and employees on or in the vicinity of Licensor's poles. Licensee shall carry insurance in such form and in such companies as are satisfactory to Licensor to protect the parties from and against any and all claims, demands, actions, judgements, costs, expenses and liabilities of every name and nature which may arise or result directly or indirectly from or by reason of such loss, injury or damage.

The Licensee shall take out and maintain throughout the period during which this Agreement shall remain in effect insurance conforming with the REA requirements of CFR 1788. The Licensee shall furnish to the Licensor a certificate evidencing compliance with the above requirements. This certificate will list Licensor as additional insured and will note specific cancellation language, as follows: "In the event of cancellation of any of the said policies, the insuring company shall give the party to whom this certificate is issued fifteen (15) days' prior notice of such cancellation."

8. ABANDONMENT OF JOINT USE POLES

(a) If Licensor desires at any time to abandon any joint use pole, it shall give Licensee notice in writing to that effect at least sixty (60) days prior to the date on which it intends to abandon such pole. If, at the expiration of said period Licensor shall have no attachments on such pole but Licensee shall not have removed all of its attachments, such pole shall become the property of Licensee, and Licensee shall hold harmless the Licensor from every obligation, liability, or cost, and from all damages, expenses or charges incurred thereafter, arising out of, or because of, the presence of or the condition of such pole or any attachments; and shall pay to Licensor a sum equal to the present value in place of such abandoned pole or poles, or such other equitable sum as may then be agreed upon between the parties, and Licensor shall provide Licensee with a properly authorized bill of sale for such pole.

(b) Licensee may at any time abandon the use of a joint use pole by giving Licensor due notice in writing of such abandonment, as provided in Section 18, and removing from such pole all attachments that Licensee may have, and in case of such abandonment of the use of any such pole, Licensee shall pay to Licensor the full rental for the current year for the space on said pole set aside for the use of Licensee.

9. RENTALS, CHARGES and RATES

(a) On or about December 31 of each year, the parties, acting in cooperation, shall tabulate the total number of joint poles in use as of the preceding day. This tabulation shall indicate the number of poles on which rentals are to be paid. The rentals shall be computed on the basis of _____dollars per annum for each jointly used pole.

(b) The yearly rental period covered by this agreement shall be the twelve month period between January 1 and December 31. Rental payable for each such rental period during the continuance of this agreement shall be due and payable on February 1 following the end of the rental period. The annual rental per pole shall apply to any attachments made or removed during the year and rents shall not be prorated; provided, however, that if this agreement is executed between June 30 and December 31, Licensee shall pay to Licensor only one-half (1/2) of the annual rental due for attachments made during that period.

(c) In the event that Licensee requires a source of electrical energy for power supply to a cable system which constitutes a part of the licensed attachments and apparatus, such energy will be supplied by Licensor in accordance with the provisions of its standard service extension policies and approved rates and tariffs.

(d) All other amounts payable under this agreement, such as for erection, rearrangement, relocation or abandonment, shall be due and payable within thirty (30) days of billing by Licensor.

10. DEFAULTS

(a) If Licensee shall fail to comply with any of the provisions of this agreement or should default in any of its obligations under this agreement, and shall fail within thirty (30) days after written notice from Licensor to correct such noncompliance or default, Licensor may, at its option, and without further notice, declare this Agreement to be terminated in its entirety, or may terminate the permit covering the pole or poles in respect to which such default or noncompliance shall have occurred. In case of such termination, no refund of accrued rental shall be made.

(b) If Licensee shall make default in the performance of any work which it is obligated to do under this agreement, the Licensor may elect to do such work, and the Licensee shall reimburse the Licensor for the cost.

(c) If the Licensee shall make default in any of its obligations under this Agreement and it becomes necessary for the Licensor to obtain the services of an attorney, who is not a salaried employee of the Licensor, to enforce such obligations, the Licensee agrees to pay any and all attorney fees, court costs and other costs of litigation associated with the enforcement of such obligations.

11. UNAUTHORIZED ATTACHMENT

(a) If any of Licensee's facilities for which no license has been issued shall be found attached to Licensor's poles, Licensor may, without prejudice to its other rights or remedies under this Agreement, including termination, require Licensee to submit, within fifteen (15) days after the date of written or oral notification from Licensor of the unauthorized attachment, a pole attachment license application. If such application is not received by Licensor within the specified time period, Licensee shall immediately remove its unauthorized attachment, or Licensor may remove such Licensee facilities without liability, and the expense of such removal shall be borne by Licensee.

(b) No act or failure to act by Licensor with regard to said unauthorized attachment shall be deemed as a ratification or the licensing of the unauthorized attachment. If any license should be subsequently issued, said license shall not operate retroactively or constitute a waiver by Licensor of any of its rights or privileges under this Agreement; provided, however, that Licensee shall be subject to all liabilities, obligations and responsibilities of this Agreement from its inception in regard to said unauthorized attachment.

12. RIGHTS OF OTHER PARTIES

Nothing herein shall be construed to limit the right of Licensor, by contract or otherwise, to confer upon others, not parties to this agreement, rights or privileges to use the joint use poles covered by this agreement.

13. TERM OF AGREEMENT

This agreement shall continue in force and effect for a period of one (1) year from and after the date of this Agreement, and thereafter from year to year unless terminated by either party by giving written notice of its intention so to do not less than thirty (30) days prior to the end of any period, provided, however, if the Licensee shall fail to commence construction on the poles of Licensor within the period of one hundred eighty (180) days after the date of execution of this License Agreement, then this License Agreement shall be null and void, and of no further force and effect. Upon termination of this agreement, Licensee shall remove its attachments from the poles of Licensor within one hundred eighty (180) days after the effective date of such termination. Should the Licensee fail to comply, the Licensor may elect to do such work and the Licensee shall pay the Licensor the cost.

14. WAIVER OF TERMS OR CONDITIONS

The failure of either party to enforce or insist upon compliance with any of the terms or conditions of this agreement shall not constitute a general waiver or relinquishment of any such terms or conditions, but such conditions and terms shall be and remain at all times in full force and effect.

15. SUPPLEMENTAL AGREEMENTS

(a) This agreement may be amended or supplemented at any time upon written agreement by the parties hereto. Should either an amendment or supplement become necessary, the party desiring such amendment or supplement shall give thirty (30) days written notice to the other party setting out in detail the changes or additions desired.

(b) In the event that Licensee desires to add or reduce the number of pole contacts, Section 15 (a) shall not apply, but in each case a sketch, map, or other mutually acceptable notice shall be submitted to Licensor, setting out in detail the pole numbers and exact locations of the poles, and the quantity of poles involved in the addition or subtraction.

16. PAYMENT OF TAXES

Each party shall pay all taxes and assessments lawfully levied on its own property upon said jointly used poles, and the taxes and the assessments which are levied on said joint use poles shall be paid by the Licensor thereof, but any tax, fee or charge levied on Licensor's poles solely because of their use by the Licensee shall be paid by Licensee.

17. INTEREST AND PAYMENTS

All amounts to be paid by Licensee to Licensor under this Agreement shall be due and payable within thirty (30) days after an itemized statement is presented to the Licensee. Any payment not made within thirty (30) days from the due date shall bear interest at the rate of _____ Percent (____%) per annum until paid.

18. NOTICES

Any notice, request, consent, demand or statement which is contemplated to be made upon either party by the other party under any of the provisions of this agreement, shall be in writing and shall be treated as duly delivered when it is either (a) personally delivered to the office of Licensor in the case of a notice to be given to Licensor, or personally delivered to the office of Licensee in the case of a notice to be given to Licensee, or (b) deposited in the United States mail and properly addressed to the party to be served as follows:

(i) If notice is to Licensor,

(ii) If notice is to Licensee,

---

19. SUPPLYING INFORMATION

(a) It is understood and agreed to between the parties that Licensee shall furnish to Licensor within _____ ( ) days after the execution of this agreement a detailed sketch or map upon which will be shown the precise locations by streets or roads of the joint use poles covered by this agreement, showing the facilities installed or to be installed upon the joint use poles and the pole numbers upon which these facilities are to be attached. Such sketch or map shall be reviewed by, and approved, commented upon, or rejected by the engineers of Licensor, and Licensee agrees to make any and all such changes in said sketch or map as are suggested by said engineers. Licensee shall not begin the installation of any facilities covered by this agreement until engineering approval by Licensor is granted.

(b) Within _____ ( ) days after the completion of the initial installation of the facilities, as set forth on the above mentioned sketch or map, Licensee shall furnish to Licensor a revised copy of said sketch or map showing the precise location of each power supply, pole contact, and other attachment of Licensee which is actually installed on poles of the Licensor. Such revised sketch or map shall be verified by the Licensor and shall be the basis for determining the number of pole contacts made initially.

(c) Licensee shall promptly report to Licensor any changes made in the number of poles of the Licensor contacted by Licensee.

(d) Upon request of Licensor or Licensee, but not sooner than six (6) years after the execution of this agreement, and every six (6) years thereafter, or as may be mutually agreed upon, the parties shall make a joint field check to verify the accuracy of contact records. If, as a result of any such joint field check, it is found that the Licensee is occupying any poles of the Licensor without having advised the Licensor as provided in Section 16, the Licensee shall pay to the Licensor the rental for such poles from the date that Licensee's attachments were installed on such poles, or if dates of installation cannot be determined to the satisfaction of both parties, the installations shall be presumed to have occurred at the same rate as those reported throughout the entire period since the last field check was made.

20. CONSTRUCTION OF AGREEMENT

This agreement is deemed executed in the state of _____ and shall be construed under the laws of the State of _____.

21. PRIOR AGREEMENTS SUPERSEDED

This agreement supersedes and replaces any and all previous agreements entered into by and between Licensor and Licensee with respect to the subject matter of this agreement.

22. ASSIGNMENT OF AGREEMENT

Neither party shall assign or otherwise transfer this Agreement or any of its rights and interests to any firm, corporation or individual, without the prior written consent of the other party.

In witness whereof, the parties have caused this Agreement to be duly executed.

ATTEST:

_____

_____
Secretary

By: _____

Title: _____

ATTEST:

_____

_____
Secretary

By: _____

Title: _____

Attach here as Exhibit "A" a map or sketch entitled "Location of the Licensee Distribution System Service Area", stating the corporate name of Licensee, and showing, outlined in red, the service area of the Licensee as required on page 1 of this agreement. This map shall be marked Exhibit "A", should be no larger than 30" x 30", shall be properly folded to the size of 8 1/2" x 11" for inclusion in this Agreement and stapled to the Agreement in the upper left corner. This Exhibit need not show location of Licensor's poles and lines, (see Section 19, supply information); but should illustrate the area in which contacts are planned.

EXHIBIT "B"

RULES AND PRACTICES FOR TELEVISION ATTACHMENTS

1. All television facilities attached to Licensor's poles shall be installed in a manner to ensure compliance with the requirements of the "National Electrical Safety Code" in effect at the time of installation.

2. The location of all cables or power supplies on Licensor's poles shall be approved in writing by the Licensor. No attachments shall be made without prior approval of Licensor.

3. All television cables and power supplies shall be located on the same side of each pole as any existing telephone cable, or as designated by the Licensor.

4. On jointly used poles where Licensor has secondary conductors, all cables and power supplies shall be located on the side of the pole opposite the secondary conductors, or as designated by the Licensor.

5. Licensee's service connections or drops to its customers shall be installed and maintained so as to provide at least a forty (40) inch square climbing space directly over and corresponding to the climbing space provided for and through any telephone service connections or drops.

6. Licensee shall cause all cabinets and enclosures to be grounded by bonding to the existing pole ground with #6 solid, bare, soft drawn copper wire.

7. No power supply shall be installed on any of Licensor's poles on which are already installed transformers, underground electric services, capacitor banks, or sectionalizing equipment.

8. No bolt used by Licensee to attach its facilities shall extend or project more than one (1) inch beyond its nut.

9. All attachments or facilities of Licensee shall have at least two (2) inches clearance from unbonded hardware.

10. All television cables shall have at least forty (40) inches clearance under the effectively grounded parts of transformers, transformer platforms, capacitor banks and sectionalizing equipment and at least forty (40) inches clearance under the current carrying parts of such equipment (energized at 8700 volts or less). Clearances not specified in this rule shall be determined by reference to the "National Electrical Safety Code".

11. No service connection shall be made or installed by Licensor until after Licensee shall have completed installation of an approved fused service disconnect switch or circuit breaker.

12. The Licensee may, with the prior written approval of the Licensor, install crossarms, alley arms, or cable extension arms for the support of any of its facilities. However, Licensee shall not use any crossarm or alley arm brace above the arm which it supports.

13. Licensee shall install and maintain any and all of its facilities in a neat and workmanlike manner consistent with the maintenance of the overall appearance of the jointly used pole, and all subject to the approval of Licensor, provided that Licensee shall be solely responsible for compliance with the specifications referred to in Section 5 of this License Agreement.

14. All down guys, head guys or messenger dead ends installed by Licensee shall be attached to jointly used poles by the use of "thru" bolts. Such bolts placed in a "bucking" position shall have at least three inches vertical clearance. Under no circumstances shall Licensee install down guys, head guys or messenger dead ends by means of encircling jointly used poles with such attachments. All guys and anchors shall be installed prior to installation of any messenger wire or cables.

15. In the event that any of Licensee's proposed facilities are to be installed upon poles already jointly used by Licensor and other parties, without in any way modifying the clearance requirements set forth in these Rules and Practices, Licensee shall negotiate with such other parties, as to clearances between its facilities and the spans of Licensee and such other parties.

16. In the event Licensee desires to request a change in the number of pole contacts, it shall do so by submitting to Licensor the standard form suitable for that purpose.

17. The Licensee shall provide a written statement, signed by a Professional Engineer representing the Licensee, that its facilities, including protection devices, as installed are fully in compliance with the applicable rules of the NESC, other codes and requirements, and good engineering design. This inspection shall be made within thirty (30) days after installation has been completed. Failure to comply will result in termination of this agreement as outlined in Section 10, a, b, & c.

EXHIBIT "C"

Application and Permit for Use of Poles

Application No._____

Date _____ 19____,

In accordance with the terms of agreement dated _____ 19____, application is hereby made for licensee to make attachments to _____ poles located in or near _____ in the County of _____ and the State of _____.

The poles, including proposed construction by (Cooperative) if necessary for which permission is requested are listed by pole number on the attached Exhibit "CI" and further identified on the attached map. Detailed construction plans and location drawings, will be furnished.

_____
Licensee

By:_____

Title:_____

Certification to be completed

I hereby certify that upon final inspection (which will be made within 30 days after construction is complete) the attachments fully comply with the National Electrical Safety Code (NESC), latest edition, and no poles or facilities of _____ will be in violation of NESC as the result of said attachments.

_____ _____
Registration Number (State) Engineer's Signature

Permission for construction granted _____, 19____, subject to (1) your approval of the following changes and rearrangements at an estimated cost to you of $_____, (2) the necessary third-party rearrangements are done satisfactorily, and (3) that licensee construct according to standards.

By: _____

Title: _____
Licensor

The above estimates for make-ready changes and rearrangements approved_____, 19____. Licensee intends to construct plant within 120 days after make-ready work is complete.

By: _____

Title: _____
Licensee

EXHIBIT "C1"

ATTACHMENTS TO BE INSTALLED

* LICENSEE: * LICENSOR:

COOPERATIVE POLE NUMBER	COMMENTS - MAKE-READY	PERMISSION GRANTED	ESTIMATED COST OF MAKE-READY

EXHIBIT "D"

NOTIFICATION OF REMOVAL

In accordance with the terms of Agreement dated _____ 19____, notice is given to Licensor of the removal of attachments from _____ poles located in or near _____ in the County of _____ and the State of _____.

The poles from which attachments have been removed are listed below:

Exhibit D1 and further identified on the attached map.

COOPERATIVE POLE NUMBER	LICENSOR USE	COOPERATIVE POLE NUMBER	LICENSOR USE

_____
Licensee

By: _____

Title: _____

Notice Acknowledged

_____ 19____

_____
Licensor

By: _____

Title: _____

CLEARANCE FROM UNDERGROUND SERVICE RISER TO CATV OR PHONE ATTACHMENT

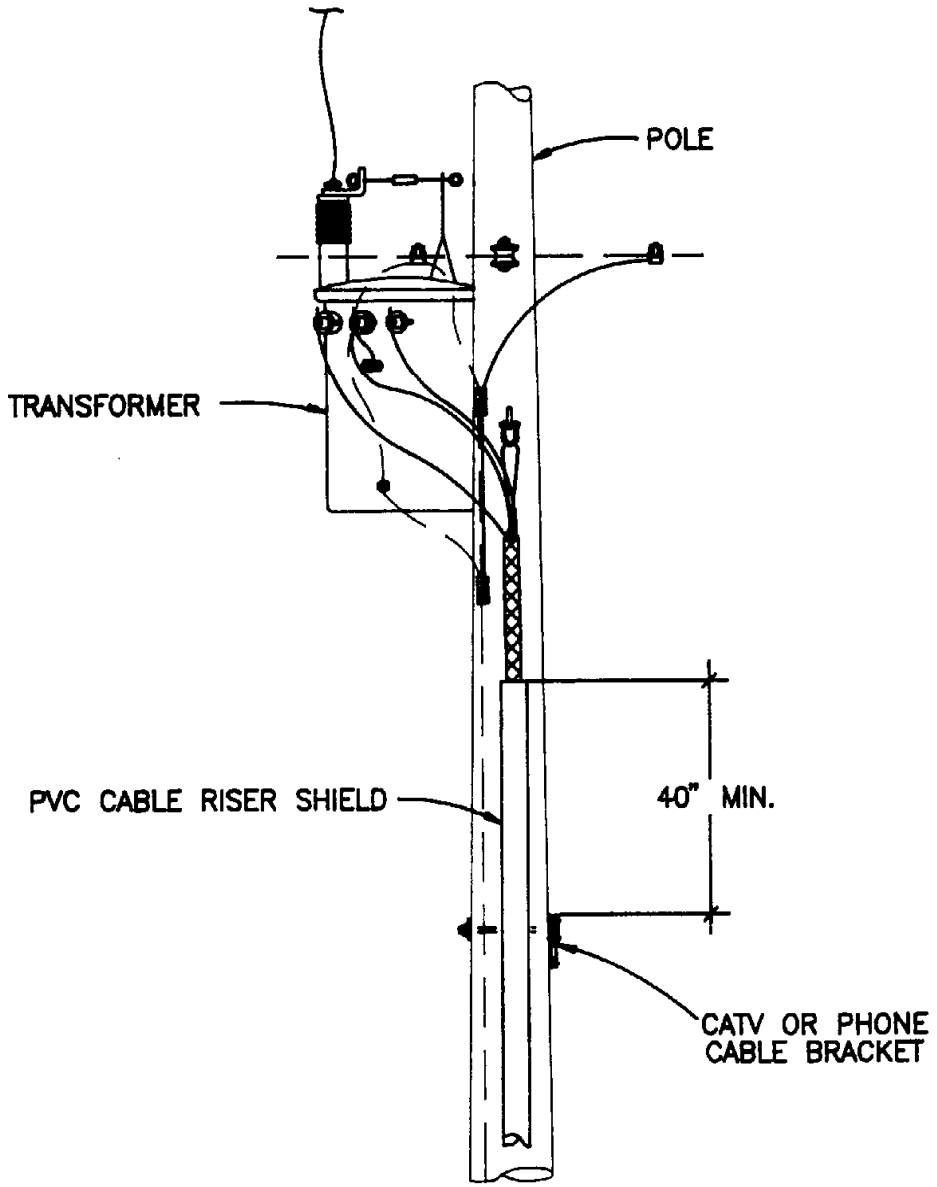

STANDARD CLEARANCES FOR CATV OR TELEPHONE ATTACHMENT		
DRWN:	DATE:	REVS'D:

CLEARANCE BETWEEN POWER NEUTRAL AND CATV OR PHONE ATTACHMENTS

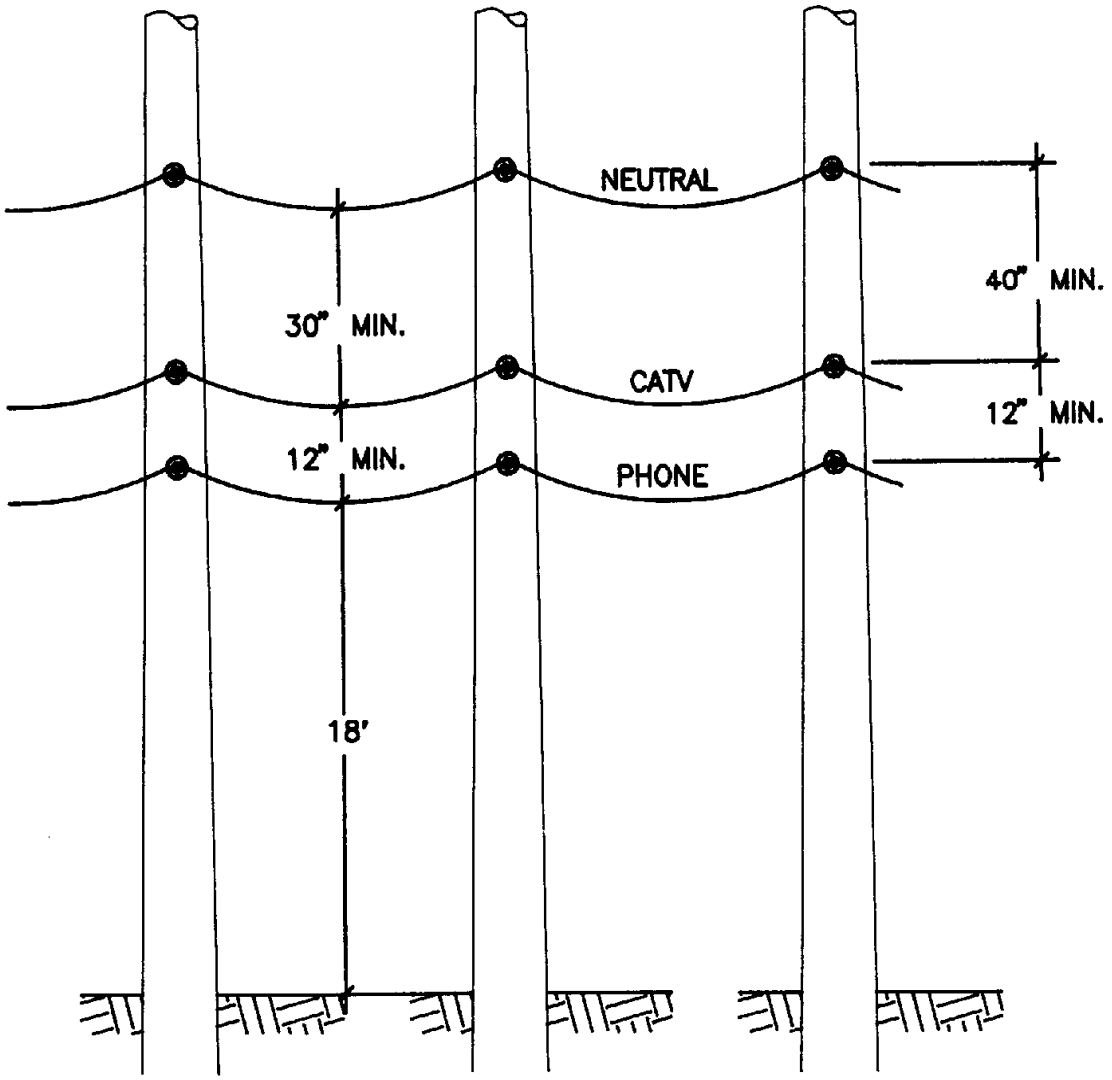

18' CLEARANCE, SHOWN ABOVE, DESIGNATES CLEARANCE ABOVE ROADS. PHONE AND CATV COMPANIES MUST ENSURE THAT 18' IS ADEQUTTE CLEARANCE TO MEET THE NESC REQUIREMENT OF 15.5 FEET AT MAXIMUM SAG CONDITIONS.

STANDARD CLEARANCES FOR CATV OR TELEPHONE ATTACHMENT		
DRWN:	DATE:	REVS'D:

CLEARANCE FROM 7.2/12.5kV RISER TO CATV OR PHONE ATTACHMENT

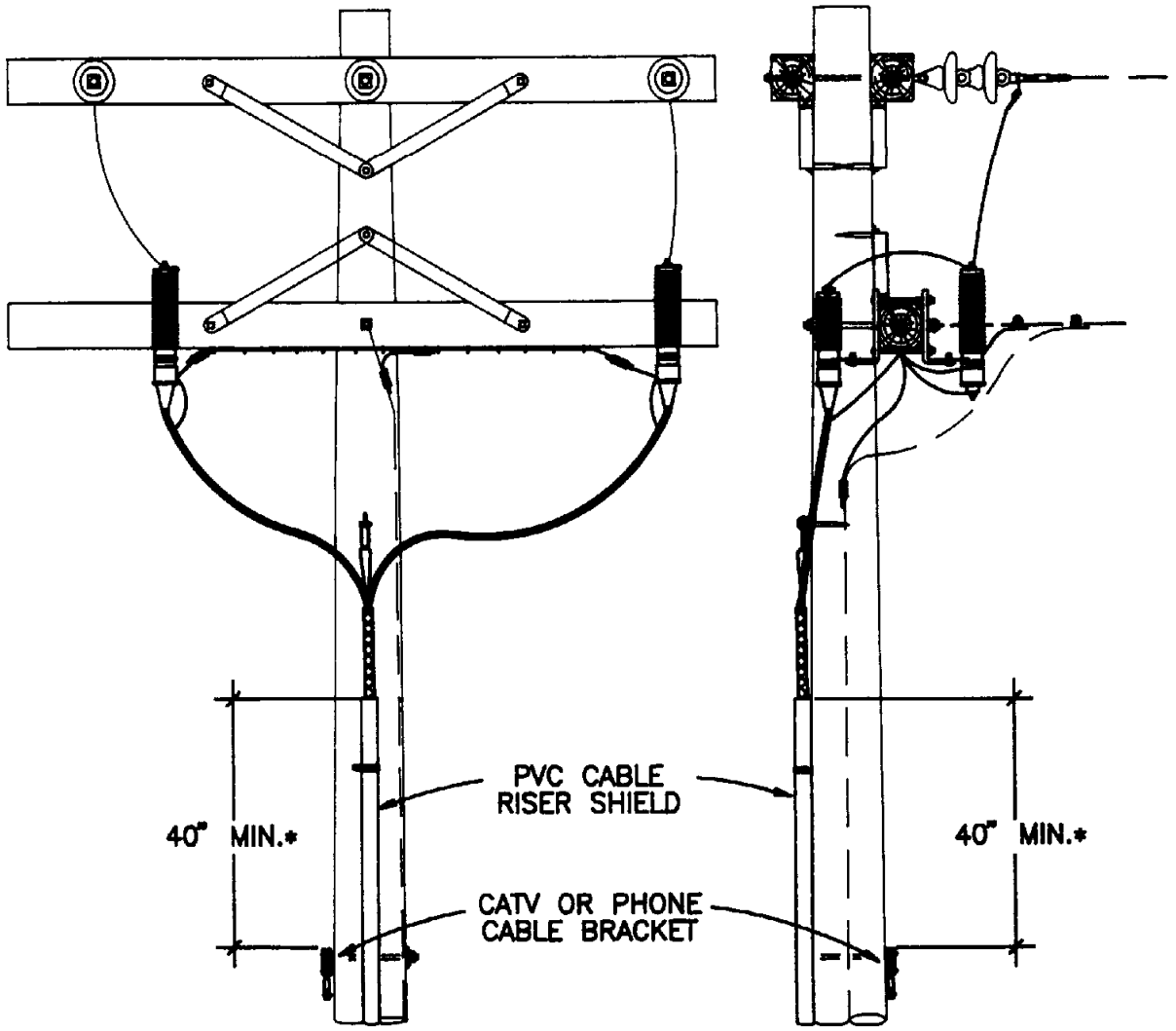

* THIS CLEARANCE INCREASES TO 43" ON 14.4/24.9kV

STANDARD CLEARANCES FOR CATV OR TELEPHONE ATTACHMENT

CLEARANCE FROM LIGHTS TO CATV OR PHONE ATTACHMENT

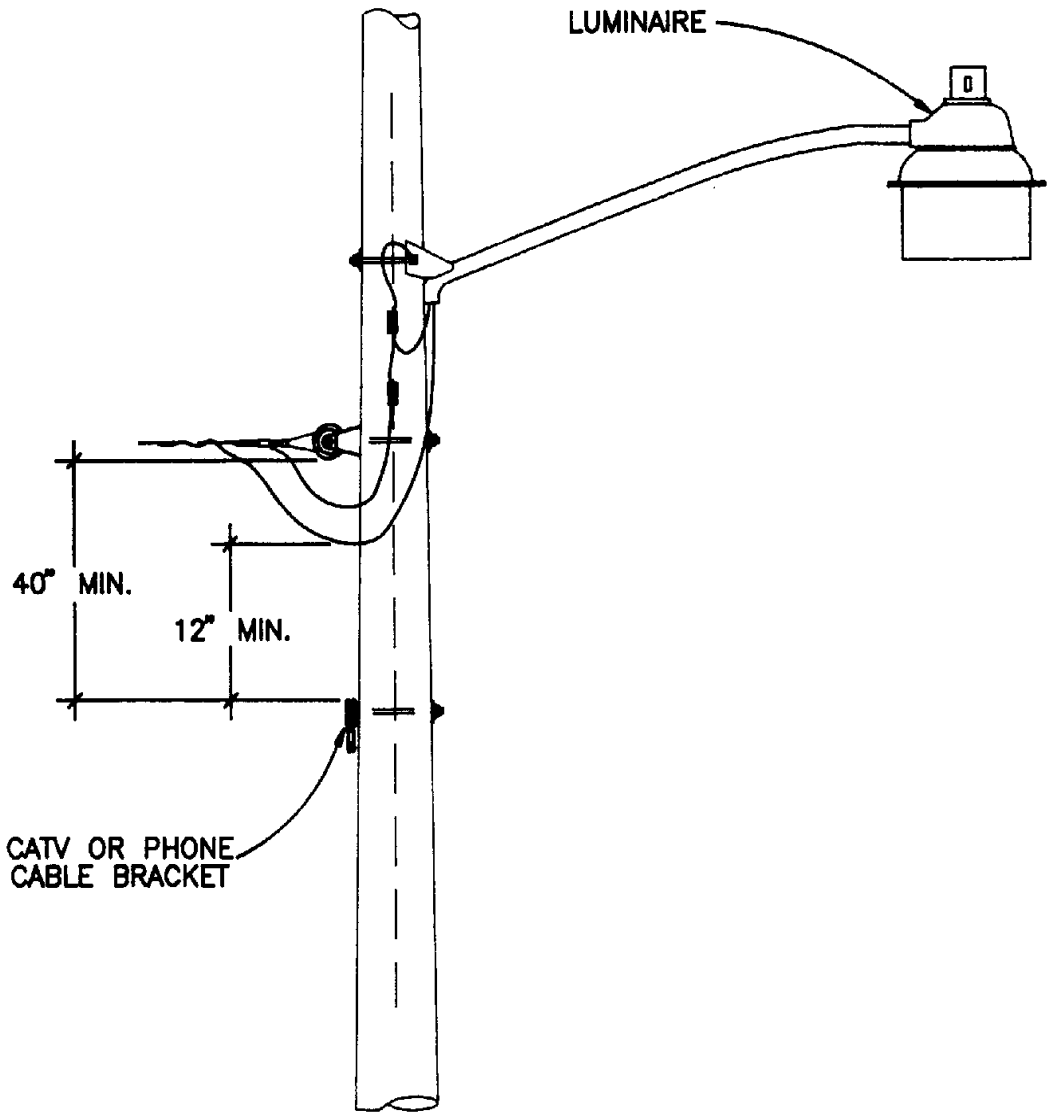

NOTE: BOTH THE 40" & 12" CLEARANCES MUST BE MAINTAINED.

STANDARD CLEARANCES FOR CATV OR TELEPHONE ATTACHMENT

CLEARANCE FROM SERVICE WIRE TO CATV AND PHONE CABLE

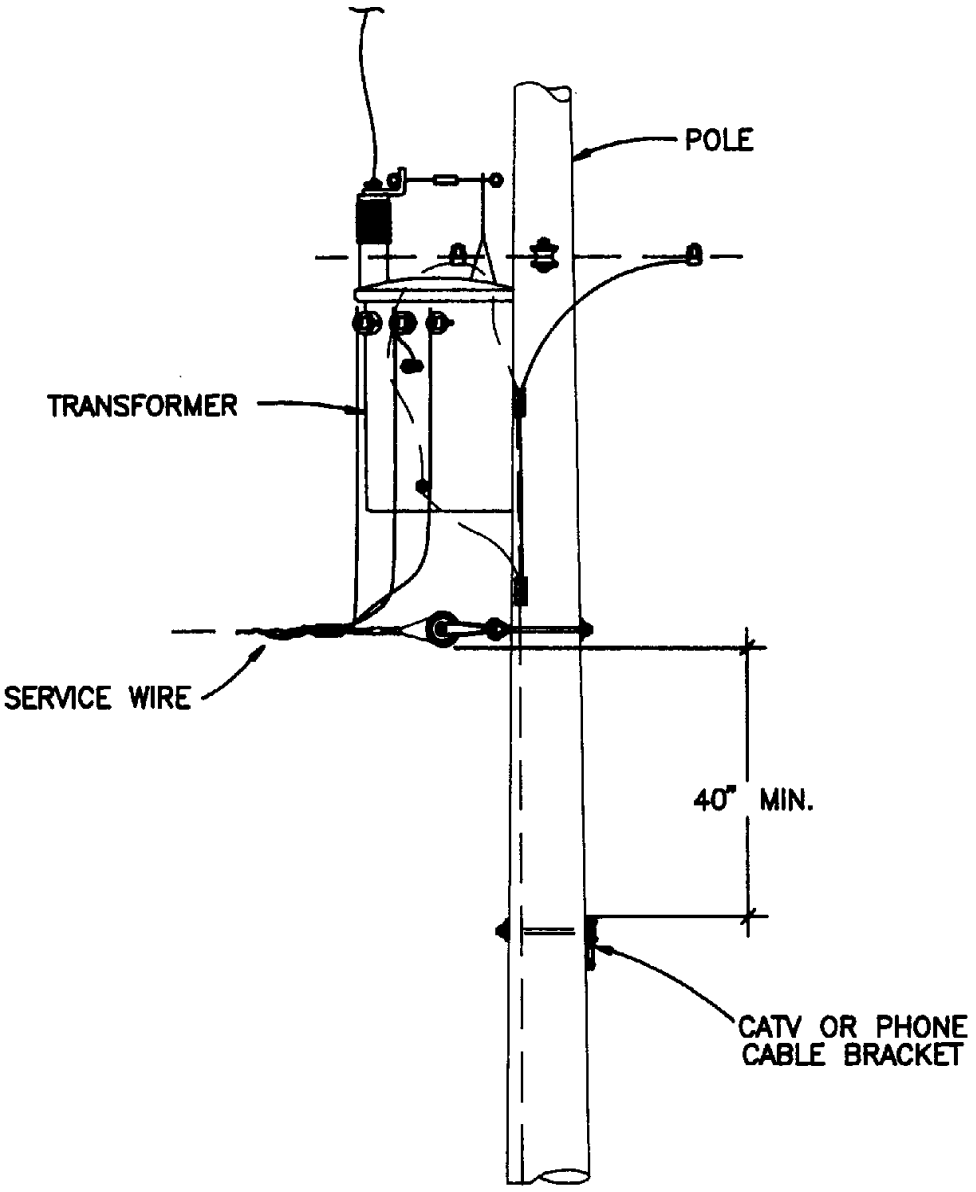

STANDARD CLEARANCES FOR CATV OR TELEPHONE ATTACHMENT		
DRWN:	DATE:	REVS'D:

CLEARANCE FROM TRANSFORMERS AND SERVICE WIRE TO CATV AND PHONE CABLE

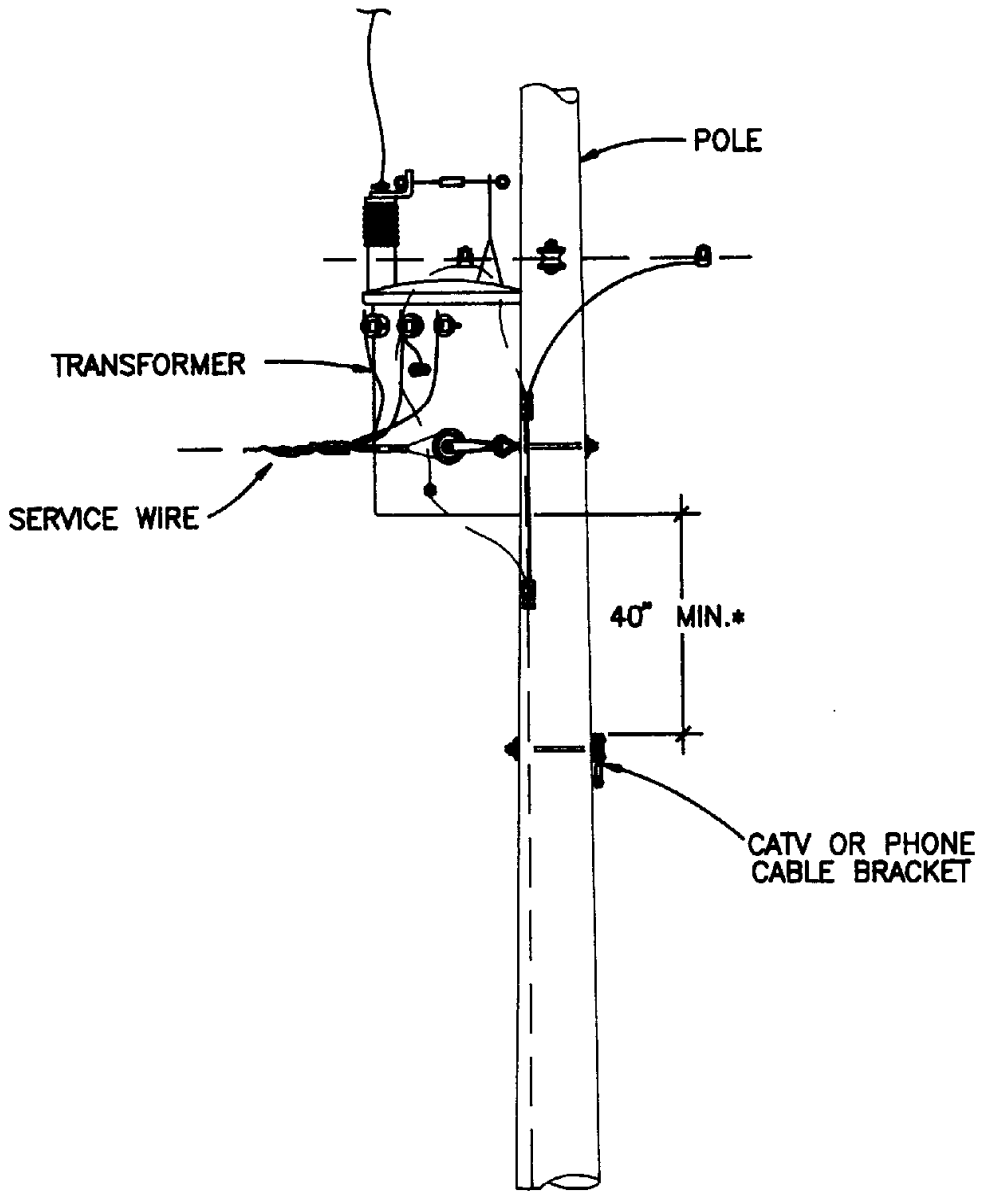

* MINIMUM CLEARANCE MAY BE REDUCED IF PERMITTED BY REQUIREMENTS OF THE MOST RECENT NESC.

STANDARD CLEARANCES FOR CATV OR TELEPHONE ATTACHMENT		
DRWN:	DATE:	REVS'D: